BladeCenter QS22 Type 0793

Installation and User's Guide

Welcome.

Thank you for buying an IBM blade server. Your blade server features superior performance, availability, and scalability.

This *Installation and User's Guide* contains information for setting up, configuring, and using your blade server.

Additionally, a service information label is attached to each BladeCenter unit and blade server. This label provides a graphical summary of many of the installation and service activities that are associated with each device.

For more information about your BladeCenter components and features, you can view the publications on the *Documentation* CD or download them from the IBM Support Web site.

Go to http://www.ibm.com/bladecenter/

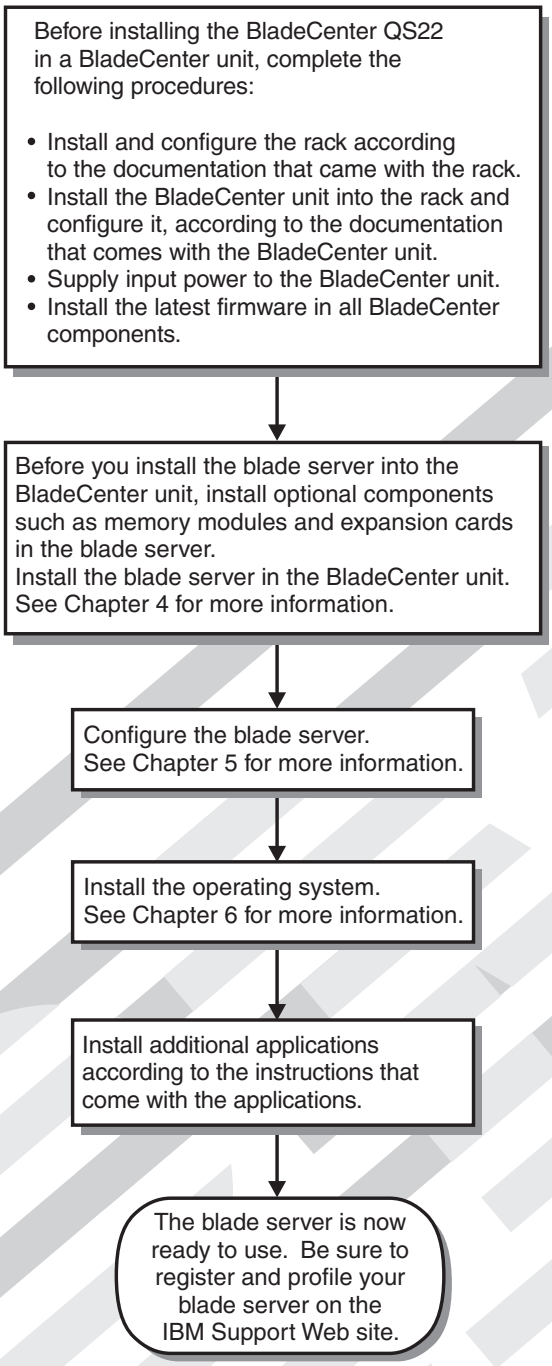

Server Support

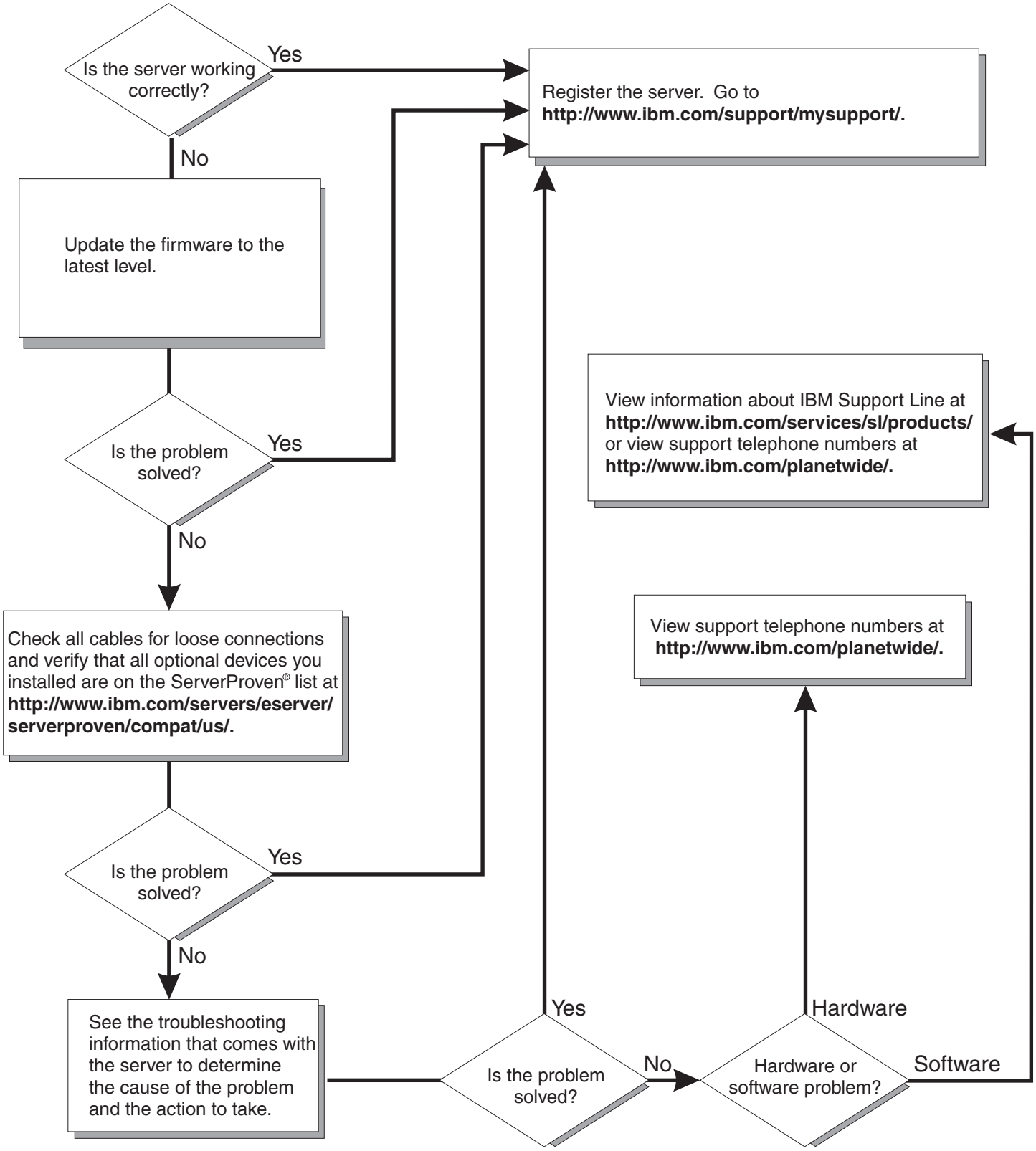

BladeCenter QS22 Type 0793

Installation and User's Guide

Note

Before using this information and the product it supports, read the general information in Appendix C, “Notices,” on page 85 and the Warranty and Support Information document for your blade server type on the Documentation CD.

Fourth Edition (October 2008)

Contents

Safety

Before installing this product, read the Safety Information.

قبل تركيب هذا المنتج، يجب قراءة الملاحظات الآمنية

Antes de instalar este produto, leia as Informações de Segurança.

在安装本产品之前，请仔细阅读 Safety Information
(安全信息)。

安裝本產品之前，請先閱讀「安全資訊」。

Prije instalacije ovog produkta obavezno pročitajte Sigurnosne Upute.

Před instalací tohoto produktu si přečtěte příručku bezpečnostních instrukcí.

Læs sikkerhedsforskrifterne, før du installerer dette produkt.

Lees voordat u dit product installeert eerst de veiligheidsvoorschriften.

Ennen kuin asennat tämän tuotteen, lue turvaohjeet kohdasta Safety Information.

Avant d'installer ce produit, lisez les consignes de sécurité.

Vor der Installation dieses Produkts die Sicherheitshinweise lesen.

Πριν εγκαταστήσετε το προϊόν αυτό, διαβάστε τις πληροφορίες ασφάλειας
(safety information).

לפני שתתקינו מוצר זה, קראו את הוראות הבטיחות.

A termék telepítése előtt olvassa el a Biztonsági előírásokat!

Prima di installare questo prodotto, leggere le Informazioni sulla Sicurezza.

製品の設置の前に、安全情報をお読みください。

본 제품을 설치하기 전에 안전 정보를 읽으십시오.

Пред да се инсталира овој продукт, прочитајте информацијата за безбедност.

Les sikkerhetsinformasjonen (Safety Information) før du installerer dette produktet.

Przed zainstalowaniem tego produktu, należy zapoznać się
z książką "Informacje dotyczące bezpieczeństwa" (Safety Information).

Antes de instalar este produto, leia as Informações sobre Segurança.

Перед установкой продукта прочтите инструкции по
технике безопасности.

Pred inštaláciou tohto zariadenia si pečítaje Bezpečnostné predpisy.

Pred namestitvijo tega proizvoda preberite Varnostne informacije.

Antes de instalar este producto, lea la información de seguridad.

Läs säkerhetsinformationen innan du installerar den här produkten.

Important:

All caution and danger statements in this documentation begin with a number. This number is used to cross reference an English caution or danger statement with translated versions of the caution or danger statement in the *IBM Safety Information* book.

For example, if a caution statement begins with a number 1, translations for that caution statement appear in the *IBM Safety Information* book under statement 1.

Be sure to read all caution and danger statements in this documentation before performing the instructions. Read any additional safety information that comes with the blade server or optional device before you install the device.

Statement 1:

DANGER

Electrical current from power, telephone, and communication cables is hazardous.

To avoid a shock hazard:

- **Do not connect or disconnect any cables or perform installation, maintenance, or reconfiguration of this product during an electrical storm.**
- **Connect all power cords to a properly wired and grounded electrical outlet.**
- **Connect to properly wired outlets any equipment that will be attached to this product.**
- **When possible, use one hand only to connect or disconnect signal cables.**
- **Never turn on any equipment when there is evidence of fire, water, or structural damage.**
- **Disconnect the attached power cords, telecommunications systems, networks, and modems before you open the device covers, unless instructed otherwise in the installation and configuration procedures.**
- **Connect and disconnect cables as described in the following table when installing, moving, or opening covers on this product or attached devices.**

To Connect:	To Disconnect:
1. Turn everything OFF.	1. Turn everything OFF.
2. First, attach all cables to devices.	2. First, remove power cords from outlet.
3. Attach signal cables to connectors.	3. Remove signal cables from connectors.
4. Attach power cords to outlet.	4. Remove all cables from devices.
5. Turn device ON.	

Statement 2:

CAUTION:
When replacing the lithium battery, use only IBM Part Number 43W9859 or 03N2449 or an equivalent type battery recommended by the manufacturer. If your system has a module containing a lithium battery, replace it only with the same module type made by the same manufacturer. The battery contains lithium and can explode if not properly used, handled, or disposed of.

Do not:

- **Throw or immerse into water**
- **Heat to more than 100°C (212°F)**
- **Repair or disassemble**

Dispose of the battery as required by local ordinances or regulations.

Statement 3:

CAUTION:
When laser products (such as CD-ROMs, DVD drives, fiber optic devices, or transmitters) are installed, note the following:

- **Do not remove the covers. Removing the covers of the laser product could result in exposure to hazardous laser radiation. There are no serviceable parts inside the device.**
- **Use of controls or adjustments or performance of procedures other than those specified herein might result in hazardous radiation exposure.**

DANGER

Some laser products contain an embedded Class 3A or Class 3B laser diode. Note the following.

Laser radiation when open. Do not stare into the beam, do not view directly with optical instruments, and avoid direct exposure to the beam.

Class 1 Laser Product
Laser Klasse 1
Laser Klass 1
Luokan 1 Laserlaite
Appareil À Laser de Classe 1

Statement 4:

≥ 18 kg (39.7 lb)

≥ 32 kg (70.5 lb)

≥ 55 kg (121.2 lb)

CAUTION:
Use safe practices when lifting.

Statement 5:

CAUTION:
The power control button on the device and the power switch on the power supply do not turn off the electrical current supplied to the device. The device also might have more than one power cord. To remove all electrical current from the device, ensure that all power cords are disconnected from the power source.

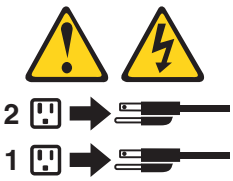

Statement 8:

CAUTION:
Never remove the cover on a power supply or any part that has the following label attached.

Hazardous voltage, current, and energy levels are present inside any component that has this label attached. There are no serviceable parts inside these components. If you suspect a problem with one of these parts, contact a service technician.

Statement 13:

DANGER

Overloading a branch circuit is potentially a fire hazard and a shock hazard under certain conditions. To avoid these hazards, ensure that your system electrical requirements do not exceed branch circuit protection requirements. Refer to the information that is provided with your device for electrical specifications.

Statement 21:

CAUTION:
Hazardous energy is present when the blade is connected to the power source. Always replace the blade cover before installing the blade.

WARNING: Handling the cord on this product or cords associated with accessories sold with this product, will expose you to lead, a chemical known to the State of California to cause cancer, and birth defects or other reproductive harm. ***Wash hands after handling.***

ADVERTENCIA: El contacto con el cable de este producto o con cables de accesorios que se venden junto con este producto, pueden exponerle al plomo, un elemento químico que en el estado de California de los Estados Unidos está considerado como un causante de cancer y de defectos congénitos, además de otros riesgos reproductivos. ***Lávese las manos después de usar el producto.***

Chapter 1. Introduction

The IBM® BladeCenter® QS22 Type 0793 blade server is a single width 2-way blade server that is based on the IBM® PowerXCell™ 8i processor.

The IBM PowerXCell 8i processing chip with its multi-core, single socket design, is optimized for high performance computing, high-end workstations, servers, and double-precision floating-point intensive applications.

To ensure compatibility with existing blade servers, the QS22 blade server provides two midplane connectors. These midplane connectors include power supply, a unit management bus, Gigabit Ethernet links, and USB ports to support BladeCenter unit media tray devices. QS22 blade servers can run alongside other types of blade servers in the same BladeCenter unit.

Note: In this document, unless otherwise stated, references to the BladeCenter unit apply to the IBM BladeCenter H unit, the IBM BladeCenter HT unit, and the IBM BladeCenter S (non RAID type only) unit.

QS22 blade servers support replaceable system memory, optional I/O buffer memory, optional high-speed expansion cards, an optional modular flash drive, and an optional Serial Attached SCSI (SAS) adapter card. The local service processor supports environmental monitoring, front panel, chip initialization, and the BladeCenter unit Advanced Management Module interface.

Features and specifications

The QS22 blade server conforms to the generic BladeCenter infrastructure and is designed for operation in an IBM BladeCenter H unit, an IBM BladeCenter HT unit, or an IBM BladeCenter S (non RAID type only) unit.

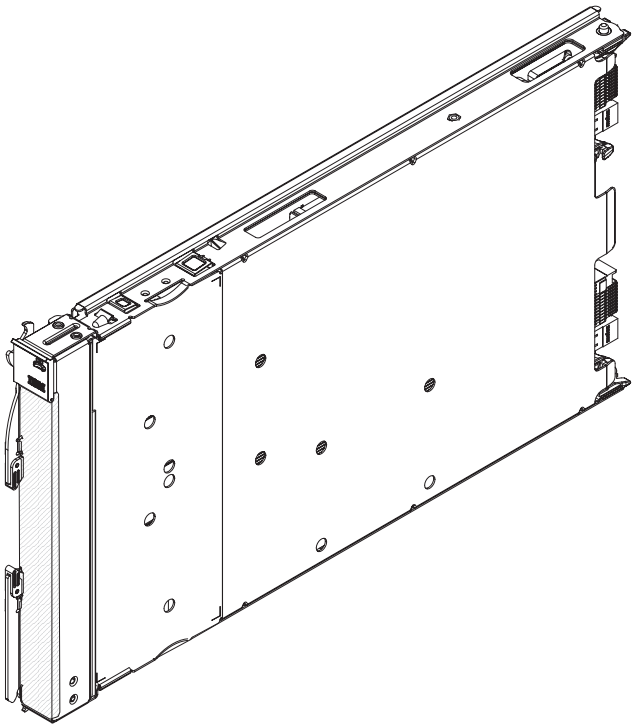

Figure 1. BladeCenter QS22

The QS22 blade server has the following major components:

- 2 IBM PowerXCell 8i processor chips (IBM PowerXCell 8i-0 and IBM PowerXCell 8i-1) operating at 3.2 GHz
- 8 DDR2 VLP DIMM slots (4 slots per IBM PowerXCell 8i) for system memory, ECC
- 2 IBM PowerXCell 8i companion chips, one per IBM PowerXCell 8i chip
- 2.5 GHz DDR full duplex front side bus (with 2 Bytes bidirectional transfer, the aggregate bandwidth is 10 GB/s)
- 1 x 8 lanes PCIe per IBM PowerXCell 8i companion chip
- 1 PCI-X bus per IBM PowerXCell 8i companion chip, running at 100 MHz
- Onboard Dual Channel Gb-Ethernet controller BCM5704S
- Onboard USB controller NEC uPD720101
- 1 BladeCenter PCI-X expansion card connector
- 1 BladeCenter High-Speed connector for 2 times x8 PCIe buses
- 2 DIMM slots (1 slot per IBM PowerXCell 8i companion chip) for optional I/O Buffer 1GB DDR2 VLP DIMMs
- Integrated Renesas 2166 Service processor (BMC, IPMI compliant code stack)

Through the BladeCenter Advanced Management Module Web interface, you can view the blade server firmware code and other hardware configuration information.

Note: Power, cooling, removable-media drives, external ports, and advanced system management are provided by the IBM BladeCenter unit. For more information, see the relevant BladeCenter unit documentation.

Power configuration and power throttling

Each blade server is powered by two BladeCenter redundant power-supply modules. By enforcing a power policy known as power domain oversubscription, the BladeCenter unit can share the power load between two power modules to ensure efficient power for each device in the BladeCenter unit. This feature depends upon the BladeCenter power modules and may be automatically enforced when the initial power is applied to the BladeCenter unit or when a blade server is inserted into the BladeCenter unit. You can configure and monitor the power environment by using the Advanced Management Module.

For more information about configuring power, see the Advanced Management Module documentation.

Boot support

The QS22 blade server can boot from:

- The optical drive of the BladeCenter unit media tray
- The optional modular flash drive
- The IBM BladeCenter Boot Disk System attached to the BladeCenter unit
- A storage device attached to the network
- If installed in a BladeCenter S unit, the local SAS drives of the unit

Support for SAS storage

You can install the optional SAS expansion card for access to SAS storage.

Apart from the expansion card on the blade server, you need one or two IBM BladeCenter SAS Connectivity Modules in the rear of the BladeCenter unit, and various options to attach IBM BladeCenter Boot Disk System to the connectivity modules.

Storage can be attached through the external SAS host controller. The blade server supports the SAS drives of the IBM BladeCenter Boot Disk System. Check the IBM BladeCenter support Web site for details of supported SAS drives at http://www.ibm.com/systems/bladecenter/support/.

If your QS22 blade server is installed in a BladeCenter S unit, you can also access the local SAS drives of the BladeCenter S unit.

Support for local storage

You can install the optional modular flash drive for system boot or local storage.

Support for IBM Director

IBM Director has an interface to the Advanced Management Module. You can use IBM Director to perform network and system management tasks for your QS22 blade servers.

For more information about IBM Director, see the documentation on the IBM Director CD that comes with the blade server, the IBM Director Information Center at http://publib.boulder.ibm.com/infocenter/eserver/v1r2/topic/diricinfo_all/diricinfoparent.html, and the IBM xSeries® Systems Management Web page at http://www.ibm.com/systems/management/, which presents an overview of IBM Systems Management and IBM Director.

Major components of the blade server

Remove the blade server from the BladeCenter unit and remove the blade server cover to see its components. Figure 2 shows the major components of the blade server.

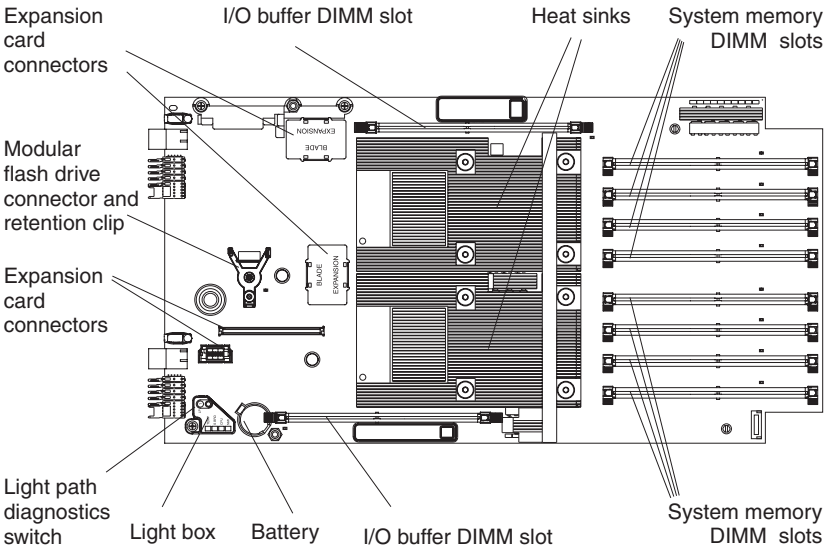

Figure 2. Major components of the blade server

Both IBM PowerXCell 8i processors and IBM PowerXCell 8i companion chips are underneath the heat sinks and therefore not visible. The IBM PowerXCell 8i processors and the companion chips are soldered onto the system board and are not removable.

Reliability, availability, and serviceability features

Three important features in server design are reliability, availability, and serviceability (RAS). These RAS features are designed to help ensure that your blade server is available when you want to use it; and, in the event of a failure, help you easily diagnose and repair the failure with minimal inconvenience.

The blade server has the following component-level RAS features:

- Transparent CPU Hardware error recovery
- ECC DDR2 memory
- Predictive failure analysis (PFA) for correctable errors (CEs) on the IBM PowerXCell 8i companion chip attached I/O Buffer DDR2 DIMMs
- PFA for CE on the system memory DDR2 DIMMs
- Memory Scrubbing on DDR2 system memory
- DDR2 System memory failure isolation for memory errors to a specific memory channel (a pair of DIMMs attached to IBM PowerXCell 8i-0 or IBM PowerXCell 8i-1)
- DDR2 I/O Buffer memory failure isolation to a specific DIMM
- PCI Bus Parity

The blade server has the following blade-level RAS features:

- Degraded boot for DDR2 memory (both system and I/O buffer) errors
- Automatic server recovery and restart:

  - Automatic reboot after boot hangs (with switch of the boot flash to the backup system firmware boot image)
  - Automatic reboot after checkstop (without switch of the boot flash)
- Environmental monitors and alerts
- System Vital Product Data (VPD) and VPD on all major electronic components
- Lightpath LEDs
- System Management Services (SMS) menu support
- Checkstop detection with data logging and automated reboot
- NMI reset button which invokes the Linux® kernel debugger

The BladeCenter unit provides the following RAS features:

- Redundant power supplies
- Power Supply error detection
- Remote Power control
- System Event Logs through Advanced Management Module
- Redundant Blowers, switches, Advanced Management Modules
- Hotplugging of all BladeCenter unit field replaceable units (FRUs) including blowers, switches and power supplies

Registering your BladeCenter QS22 blade server

Record information about the blade server in the following table. You need this information when you register the blade server with IBM. You can register the blade server at http://www.ibm.com/support/mysupport/.

Product name	BladeCenter QS22
Machine type	0793
Model number	_____
Serial number	_____

The machine type, model number, and serial number are on the label that covers the base of the blade server. The label is visible when the blade server is not in the BladeCenter unit.

Checking for software and firmware updates

Occasionally, firmware and software updates become available. To check for updates and download the latest device drivers, firmware updates or documents, go to http://www.ibm.com/support/us/en/ and navigate to the downloads for your blade server.

Notices and statements used in this document

The caution and danger statements that appear in this document are also in the multilingual *Safety Information* document, which is on the IBM *BladeCenter Documentation* CD. Each statement is numbered for reference to the corresponding statement in the *Safety Information* document.

The following notices and statements are used in this document:

- **Notes:** These notices provide important tips, guidance, or advice.

- **Important:** These notices provide information or advice that might help you avoid inconvenient or problem situations.
- **Attention:** These notices indicate potential damage to programs, devices, or data. An attention notice is placed just before the instruction or situation in which damage could occur.
- **Caution:** These statements indicate situations that can be potentially hazardous to you. A caution statement is placed just before the description of a potentially hazardous procedure step or situation.
- **Danger:** These statements indicate situations that can be potentially lethal or extremely hazardous to you. A danger statement is placed just before the description of a potentially lethal or extremely hazardous procedure step or situation.

Using this book

This *Installation and User's Guide* provides information to help you:
- Set up the blade server
- Start and configure the blade server
- Install blade server options
- Install an operating system on the blade server
- Perform basic troubleshooting of the blade server

Note: The illustrations in this document might differ slightly from the hardware.

Updates might be available for this document. You can check for the most recent version at http://www.ibm.com/support/us/en/ or at the BladeCenter information center. The BladeCenter information center is available in the IBM Systems information center at http://publib.boulder.ibm.com/infocenter/systems/.

Related documentation

In addition to this document, the following documentation also comes with the server:

- *Problem Determination and Service Guide*

  This document is in Portable Document Format (PDF) on the *Documentation* CD. It contains information to help you solve problems yourself, and it contains information for service technicians.
- *Safety Information*

  This document is in Portable Document Format (PDF) on the *Documentation* CD. It contains translated caution and danger statements. Each caution and danger statement that appears in the documentation has a number that you can use to locate the corresponding statement in your language in the *Safety Information* document.
- *Warranty and Support Information*

  This document is in PDF on the IBM *Documentation* CD. It contains information about the terms of the warranty and about service and assistance.
- IBM Software Development Kit for Multicore Acceleration documentation

  Documentation in PDF can be downloaded from http://www.ibm.com/developerworks/power/cell/. It includes information about how to program applications for the blade server.

Depending on the server model, additional documentation might be included on the *Documentation* CD.

The blade server can have features that are not described in the documentation that comes with the server. Additionally, the documentation might be updated occasionally to include information about those features, or technical updates might be available to provide additional information that is not included in the blade server documentation on the CD.

You can check for the most recent versions of all BladeCenter documentation http://www.ibm.com/support/us/en/ or at the BladeCenter information center. The BladeCenter information center is available in the IBM Systems information center at http://publib.boulder.ibm.com/infocenter/systems/.

In addition to the documentation in this library, be sure to review the planning and installation documents for your BladeCenter hardware available at http://www.ibm.com/support/us/en/.

The Documentation CD

The *Documentation* CD contains documentation for the blade server in PDF and includes the IBM Documentation Browser to help you find information quickly.

Hardware and software requirements

The *Documentation* CD requires the following minimum hardware and software:

- Microsoft® Windows® XP, Windows 2000, or Red Hat Linux
- 100 MHz microprocessor
- 32 MB of RAM
- Adobe® Acrobat Reader 3.0 (or later) or xpdf, which comes with Linux operating systems

  Note: Acrobat Reader software is included on the CD, and you can install it when you run the Documentation Browser.

Using the Documentation Browser

Use the Documentation Browser to browse the contents of the CD, read brief descriptions of the books, and view books using Adobe Acrobat Reader or xpdf. The Documentation Browser automatically detects the regional settings in use in your system and displays the books in the language for that region (if available). If a book is not available in the language for that region, the English version is displayed.

Use one of the following procedures to start the Documentation Browser:

- If Autostart is enabled, insert the CD into your CD or DVD drive. The Documentation Browser starts automatically.
- If Autostart is disabled or is not enabled for all users:
  - If you are using a Windows operating system, insert the CD into your CD or DVD drive and click **Start** ▸ **Run**. In the **Open** field, type:

    ```
    x:\win32.bat
    ```

    where *x* is the drive letter of your CD drive, then click **OK**.
  - If you are using a Linux operating system, insert the CD into your CD drive and run the following command from the /mnt/cdrom directory:

    ```
    sh runlinux.sh
    ```

The **Available Topics** list displays all the books for the blade server. Some books might be in folders. A plus sign (+) indicates each folder or book that has additional books under it. Click the plus sign to display the additional books.

When you select a book, a description of the book appears under **Topic Description**. To select more than one book, press and hold the Ctrl key while you select the books. Click **View Book** to view the selected book or books in Acrobat Reader or xpdf. If you selected more than one book, all the selected books are opened in Acrobat Reader or xpdf.

To search all the books, type a word or word string in the **Search** field and click **Search**. The books in which the word or word string appears are listed in order of the most occurrences. Click a book to view it, and press Crtl+F to use the Acrobat search function or Alt+F to use the xpdf search function within the book.

Click **Help** for detailed information about using the Documentation Browser.

Chapter 2. Power, controls, and indicators

This chapter describes the power features, how to turn on and turn off the blade server, and what the controls and indicators mean. This chapter also identifies the system board connectors.

Turning on the blade server

The QS22 blade server is hot-swappable and can be inserted into the BladeCenter unit when the unit is already powered up. However, it can only be powered on by one of the methods described in this section. While the blade server is powering up, the power-on LED on the front of the server is lit. See “Blade server controls and LEDs” on page 10 for the power-on LED states.

After you have installed the blade server into a powered up BladeCenter unit, wait until the power on LED on the blade server flashes slowly before turning on the blade server.

You can turn on the blade server in any of the following ways:

Using the power-control button
Providing local power control is enabled, you can press the power-control button (see Figure 3) which is behind the control-panel door on the front of the blade server. Local power control is enabled or disabled through the Advanced Management Module Web interface.

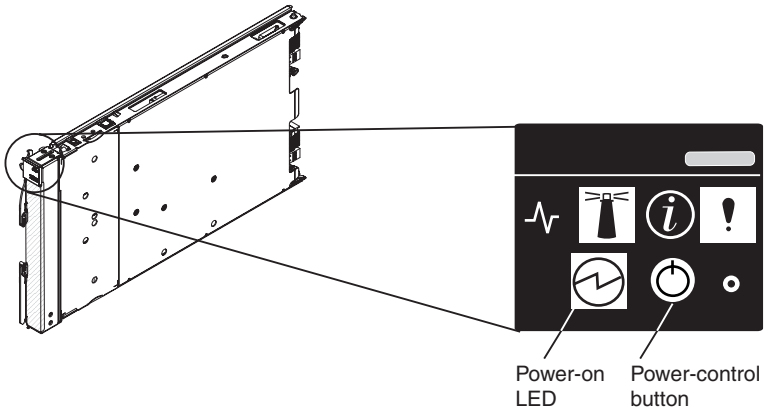

Figure 3. Blade server power-control button

Using the BladeCenter Advanced Management Module
You can use the Advanced Management Module Web interface to turn on the blade server remotely.

Using the Wake on LAN® feature:
If you want to use the Wake on LAN feature, you must enable it through the operating system. Note that Wake on LAN does not operate if it has been disabled through the Advanced Management Module.

In the event of a power failure the BladeCenter unit and then the blade server can start automatically when power is restored. You must configure this through the BladeCenter Advanced Management Module. See the *BladeCenter Management Module User's Guide* for further information about this feature.

Turning off the blade server

When you turn off the blade server, it is still connected to power through the BladeCenter unit and can continue to respond to requests from the service processor, including remote requests to turn the blade server on. To remove all power from the blade server, you must physically remove it from the BladeCenter unit or power off the BladeCenter unit.

To avoid loss of data, shut down the Linux operating system before you turn off the blade server. Shut down the operating system by entering the `shutdown -h now` command at the command prompt or by choosing **shutdown** if you are using a graphical user interface (GUI). See your operating system documentation for additional information about shutting down the operating system.

If the BladeCenter unit has not been turned off, the blade server can be turned off in any of the following ways:

Using the power-control button
Press the power-control button behind the control-panel door on the front panel of the blade server. This starts an orderly shutdown of the operating system if it has not been shut down already, providing your operating system supports this feature, before turning off the blade server. If the operating system stops functioning, pressing and holding the power-control button for more than 4 seconds turns off the blade server.

Using the BladeCenter Advanced Management Module
You can use the Advanced Management Module Web interface to turn off the blade server remotely. You can also configure the Advanced Management Module to turn off the blade server automatically if the system is not operating correctly.

Note: After turning off the blade server, wait at least 5 seconds before turning it on again.

Blade server controls and LEDs

This section describes the controls and LEDs on the front panel of the blade server. For further information about the LEDs and how they can be used to assist in troubleshooting, see *Problem Determination and Service Guide*.

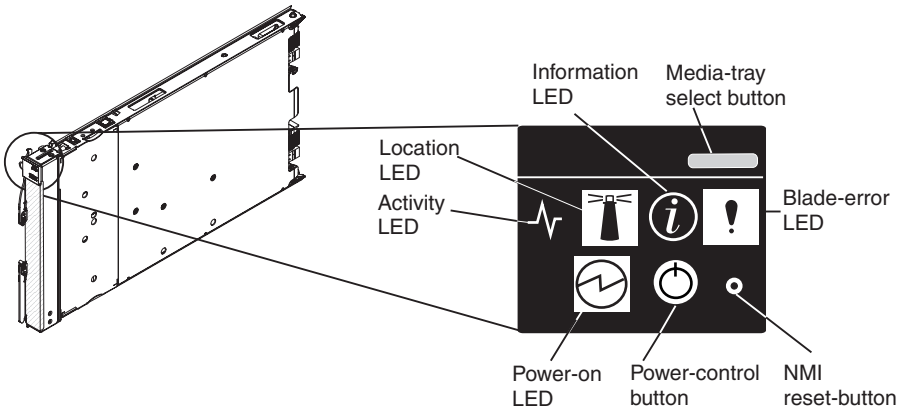

Figure 4. Power-control button and LEDs

Note: The control panel door which normally covers the LEDs and power-control button is omitted for reasons of clarity.

Activity LED:
This green LED lights when there is network activity.

Location LED:
This blue LED is turned on remotely by the system administrator to assist in locating the blade server. The location LED on the BladeCenter unit lights at the same time.

Information LED:
This amber LED lights to indicate that information about a system event has been placed in the Advanced Management Module Event Log. The information LED remains on until turned off by Advanced Management Module or through IBM Director Console.

Blade error LED:
This amber LED lights when a system error has occurred in the blade server.

Power-control button:
Press this button to turn the blade server on or off. The power-control button only has effect if local power control is enabled for the blade server. Local power control is enabled and disabled through the BladeCenter Advanced Management Module Web interface.

Media tray select button:
This button associates the shared BladeCenter unit media tray (DVD/CD drive and USB ports) with the blade server. The LED on the button flashes while the request is being processed, then lights when the ownership of the media tray has been transferred to the blade server.

It can take approximately 20 seconds for the operating system on the blade server to recognize the media tray.

Power on LED:
This green LED indicates the power status of the blade server as follows:

- Flashing rapidly - The service processor on the blade server is communicating with the BladeCenter Advanced Management Module.
- Flashing slowly - The blade server has power but is not turned on.
- Lit continuously (steady) - The blade server has power and is turned on.
- Not lit. Either the BladeCenter unit is powered off, or a power failure has occurred on the blade server or the BladeCenter unit.

NMI reset button
If the operating system has been installed, pressing the button with a paper clip or pin causes the operating system to call the Linux kernel debugger.

The blade error LED, information LED, and location LED can be turned off through the Advanced Management Module Web interface. For additional information about errors, see “Problems indicated by the front panel LEDs” on page 62.

System board LEDs

The QS22 blade server has status LEDs on the system board to indicate the health of various components. Some are within the light box while others are in different locations. A lit LEDs indicates an error condition. Complete information about the LEDs can be found in the *Problem Determination and Service Guide*.

To find out what if any errors have occurred on the system board, you must:

1. Remove the blade server from the BladeCenter unit
2. Open the cover
3. Press the light path diagnostics switch

This lights any error LEDs that were turned on during processing. It also lights a green LED to indicate the capacitor is charged and the light path diagnostics system is operating.

Figure 5 shows the location of the light path LEDs and the diagnostics switch.

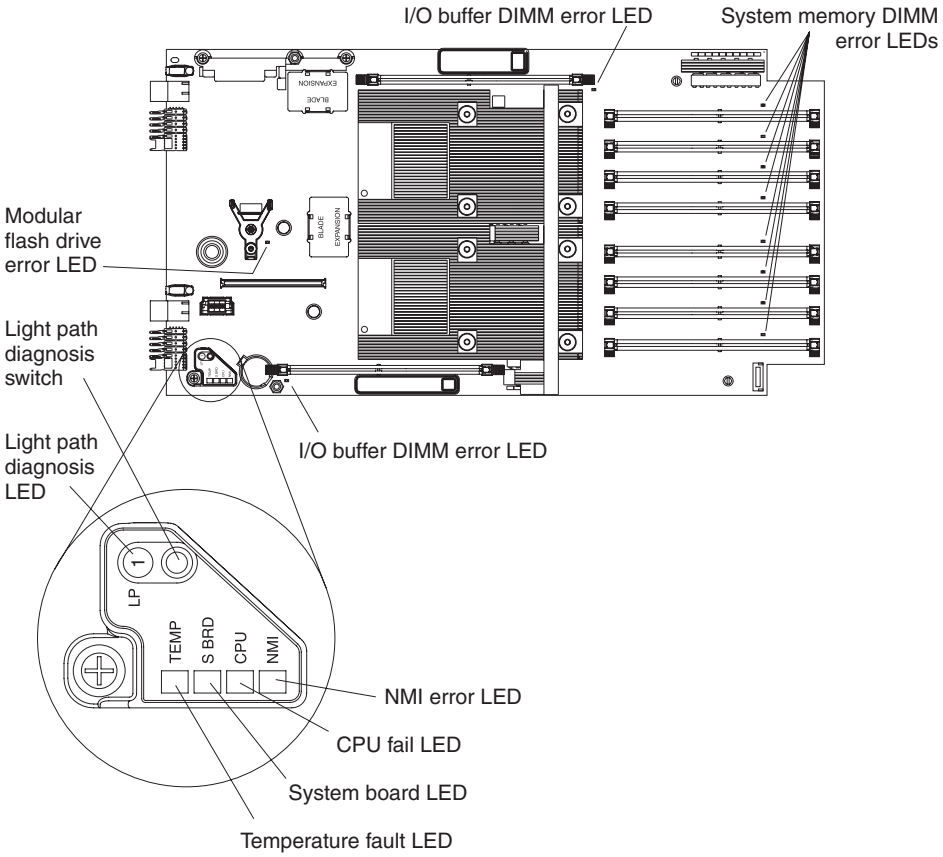

Figure 5. System-board LEDs

Pressing the light path diagnostics switch lights the appropriate LED to indicate where an error has occurred.

System board internal and expansion card connectors

The following illustration shows the location of the connectors for user-installable options.

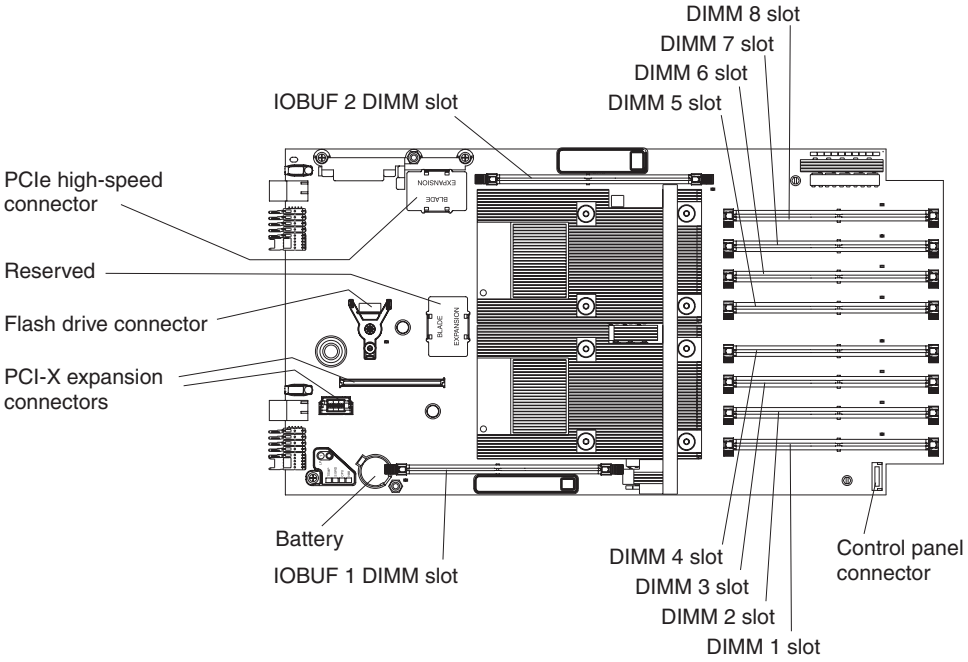

Figure 6. Locations of the expansion option connectors on the system board

Chapter 3. Installing the blade server

If you have options to install in the blade server, you should install them now. See Chapter 4, “Installing and removing replaceable units,” on page 19 and the *BladeCenter QS22 Problem Determination and Service Guide* for further information, then continue with the instructions in this chapter.

Installation guidelines

The QS22 blade server is a hot-swappable device: you can install or remove the blade server while the BladeCenter unit is running. QS22 blade servers can operate alongside different blade servers in the same BladeCenter unit.

Attention: If you plan to remove a blade server and reinstall it, be sure to note the number of the bay that contains the blade server before you remove it. You must reinstall the blade server in the same bay from which it was removed. Reinstalling a blade server into a different bay than the one from which it was removed could have unexpected consequences, such as incorrect reconfiguration of the blade server. Some blade server configuration information and update options are established according to bay number.

If you reinstall the blade server into a different bay, you might have to reconfigure the blade server.

Statement 21:

CAUTION:
Hazardous energy is present when the blade server is connected to the power source. Always replace the blade cover before installing the blade server.

For information about the design of the BladeCenter unit, including the hot-swap blade bays, see the *Installation and User's Guide* for your BladeCenter unit.

While you can install or remove the blade server without removing power from the BladeCenter unit, you must turn off the blade server before removing it from the BladeCenter unit.

The maximum number of blade servers that the BladeCenter unit supports depends on the electrical power provided by the power supplies that are installed in the BladeCenter unit. For more information about determining the power requirements for the blade server, see the *IBM BladeCenter Power Module Upgrade Guidelines*.

Installing the blade server

Complete the following steps to install a blade server into the BladeCenter unit:

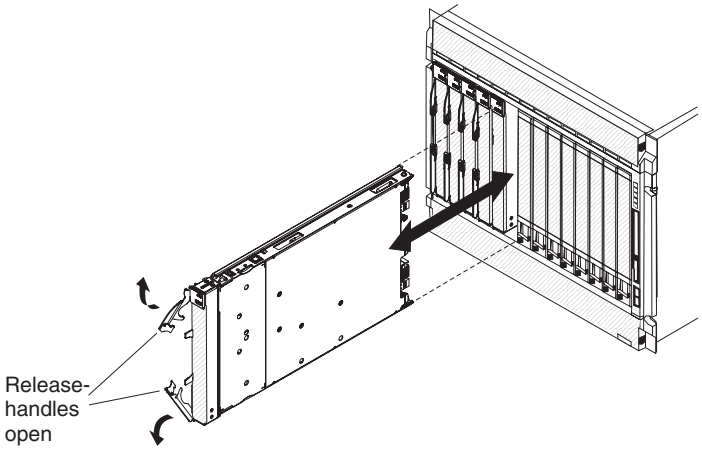

Figure 7. Inserting the blade server into the BladeCenter unit

1. Read the safety information beginning on page vii and “Installation guidelines” on page 19.
2. If you have not done so already, install any options. See Chapter 4, “Installing and removing replaceable units,” on page 19 for further information.
3. Select the bay for the blade server.
4. If the bay that you selected contains blade fillers, remove the blade fillers.

   When you remove blade fillers from a blade bay in the BladeCenter unit *do not* discard the blade fillers. You need the blade fillers if you ever remove the blade server or during repair or upgrades.

   For future use, store the blade fillers in a static-protective environment.

   To help ensure proper cooling, performance, and system reliability, do not operate the BladeCenter unit for more than 1 minute without a blade server or blade fillers installed in each blade bay.
5. Make sure that the release levers on the blade server are in the open position (perpendicular to the blade server).
6. Slide the blade server into the bay until it stops. The spring-loaded doors further back in the bay that cover the bay opening move out of the way as you insert the blade server.
7. Push the release levers on the front of the blade server to the closed position.
8. A set of user labels comes with the BladeCenter unit. Use them to write identifying information for each blade server; then place the label on the BladeCenter unit. See your BladeCenter unit documentation for the exact location.

   Important: Do not place the label on the blade server or in any way block the ventilation holes on the blade server.
9. Turn on the blade server (see “Turning on the blade server” on page 9). The power-on LED on the blade server changes from the slowly-flashing state to a continuously lit (steady) state.
10. If this is the initial installation of the blade server, install the operating system. Use the installation instructions that come with the operating system. For more information, see Chapter 6, “Installing the operating system,” on page 55.
11. Check http://www.ibm.com/support/us/en/ for any software or firmware updates.

12. Update the firmware or software if required.

    Note: You may be required to reboot the blade server.

Once you have installed the operating system and performed any required updates, the blade server is ready for use. If you have not already done so, turn on the blade server (see “Turning on the blade server” on page 9). The power on LED on the blade server changes from the slowly-flashing state to a continuously lit (steady) state.

If you have other blade servers to install, you can do so now.

Chapter 4. Installing and removing replaceable units

This chapter provides instructions for installing or replacing units on the blade server. Replaceable units are components, such as memory modules, and I/O expansion cards. Some removal instructions are provided in case you need to replace one replaceable unit with another.

You can replace the following items:

- Battery
- Front bezel assembly (control panel)
- Blade server cover

You can add, remove or replace the following optional items:

- Modular flash drive
- High-speed expansion card
- System memory DDR2 modules
- I/O buffer DDR2 memory modules
- SAS expansion card
- BladeCenter PCI Express I/O Expansion Unit

Installation guidelines

Before you begin, read the following:

- Read the safety information beginning on page vii and the guidelines in “Handling static-sensitive devices” on page 20. This information will help you work safely with the blade server and components.
- You do not have to turn off the blade server or disconnect the BladeCenter unit from power to install or replace any of the hot-swappable modules on the rear of the BladeCenter unit.
- Before you remove a hot-swappable blade server from the BladeCenter unit, you must shut down the operating system on it by typing the `shutdown -h now` command or choosing the shut down option from your GUI. See “Turning off the blade server” on page 10 for details. You do not have to shut down the BladeCenter unit itself.
- Blue on a component indicates touch points, where you can grip the component to remove it from or install it in the blade server or BladeCenter unit, open or close a latch, and so on. An exception to this rule are the DIMM clips and the battery clip that are also touch points but not colored blue.
- Orange on a component or an orange label on or near a component indicates that the component can be hot-swapped. You can remove or install the component while the blade server or BladeCenter unit is running providing the blade server or BladeCenter unit and operating system support the hot-swappable capability. Orange can also indicate touch points on hot-swappable components. See the instructions for removing or installing a specific hot-swappable component for any additional procedures that you might have to perform before you remove or install the component.

  Note: There are no hot-swappable components on the QS22 blade server. To replace parts, you must turn off the blade server and remove it from the BladeCenter unit.

System reliability guidelines

To help ensure proper cooling and system reliability, be sure that:

- The ventilation holes on the blade server are not blocked.
- Each of the blade bays on the front of the BladeCenter unit has a blade server or blade filler installed. Do not operate the BladeCenter unit for more than 1 minute without a blade server or blade filler installed in each blade bay.
- You have followed the reliability guidelines in the documentation that comes with the BladeCenter unit.

Handling static-sensitive devices

Attention: Static electricity can damage electronic devices and your system. To avoid damage, keep static-sensitive devices in their static-protective packages until you are ready to install them.

To reduce the possibility of electrostatic discharge, observe the following precautions:

- Limit your movement. Movement can cause static electricity to build up around you.
- Handle the device carefully, holding it by its edges or its frame.
- Do not touch solder joints, pins, or exposed printed circuitry.
- Do not leave the device where others can handle and damage it.
- While the device is still in its static-protective package, touch it to an *unpainted* metal part of the BladeCenter chassis for at least 2 seconds. This drains static electricity from the package and from your body.
- Remove the device from its package and install it directly into the blade server or BladeCenter unit without setting the device down. If it is necessary to set down the device, put it back into its static-protective package. Do not place the device on the blade server cover or on a metal surface.
- Take additional care when handling devices during cold weather. Heating reduces indoor humidity and increases static electricity.
- Wear an electrostatic-discharge wrist strap, if one is available.

Removing the blade server from the BladeCenter unit

The blade server is a hot-swappable device, and the blade bays in the BladeCenter unit are hot-swappable bays. Therefore, you can install or remove the blade server without removing power from the BladeCenter unit. However, you must turn off the blade server before removing it from the BladeCenter unit.

Attention:

- To maintain proper system cooling, do not operate the BladeCenter unit for more than 1 minute without a blade server or blade fillers installed in each blade bay.
- Note the number of the bay that contains the blade server before you remove it. You must reinstall the blade server in the same bay from which it was removed. Reinstalling a blade server into a different bay than the one from which it was removed could have unexpected consequences, such as incorrect reconfiguration of the blade server. Some blade server configuration information and update options are established according to bay number.

  If you reinstall the blade server into a different bay, you might have to reconfigure the blade server.

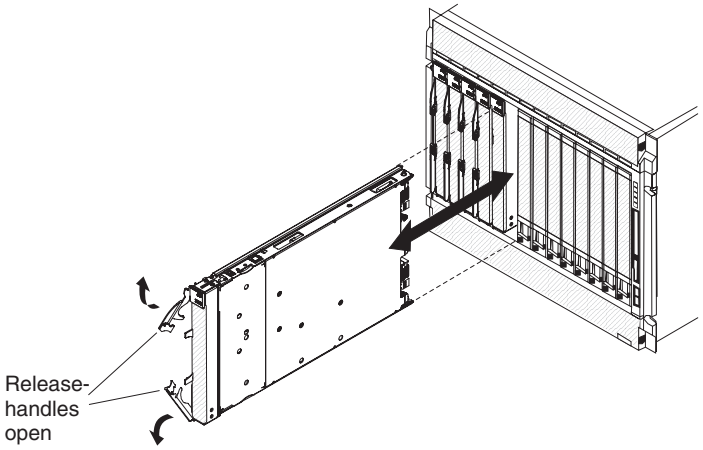

Figure 8. Removing the blade server

Complete the following steps to remove the blade server:

1. Read the safety information beginning on page vii and “Installation guidelines” on page 19.
2. If the blade server is operating, the power on LED is lit continuously (steady). Before you remove a blade server from the BladeCenter unit, you must shut down the operating system on it by typing the `shutdown -h now` command or choosing the shut down option from your GUI. See “Turning off the blade server” on page 10 for details. You do not have to shut down the BladeCenter unit itself.
3. Open the two release levers as shown in Figure 8. The blade server moves out of the bay approximately 0.6 cm (0.25 inch).
4. Pull the blade server out of the bay.
5. Place either a blade filler or a new blade server in the bay within 1 minute.

Opening and removing the blade server cover

You must open the blade server cover to access, install or remove any of the replaceable items.

If a BladeCenter PCI Express I/O Expansion Unit has been installed on your blade server, ignore this section and follow the instructions in “Removing the BladeCenter PCI Express I/O Expansion Unit” on page 22 instead.

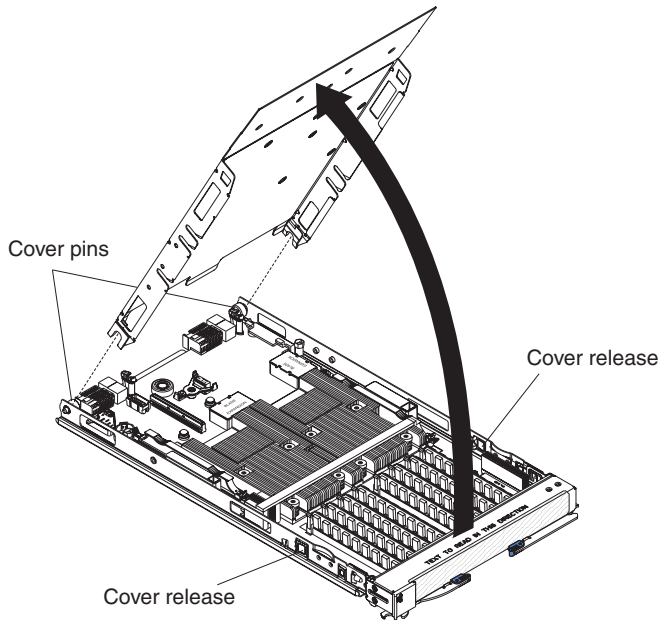

Figure 9. Opening the blade server cover

Complete the following steps to open the blade server cover:

1. Read the safety information beginning on page vii and “Installation guidelines” on page 19.
2. If applicable, shut down the operating system, turn off the blade server, and remove the blade server from the BladeCenter unit. See “Removing the blade server from the BladeCenter unit” on page 20.
3. Carefully place the blade server on a flat, static-protective surface, with the cover side up.
4. Press the blue blade cover release on each side of the blade server and lift the outer cover open (see Figure 9).
5. If you want to remove the cover, carefully lift it from the cover pins and set it aside (see Figure 9).

Statement 21:

CAUTION:
Hazardous energy is present when the blade server is connected to the power source. Always replace the blade cover before installing the blade server.

Removing the BladeCenter PCI Express I/O Expansion Unit

You must remove BladeCenter PCI Express I/O Expansion Unit, if installed, to access, install or remove any of the replaceable items.

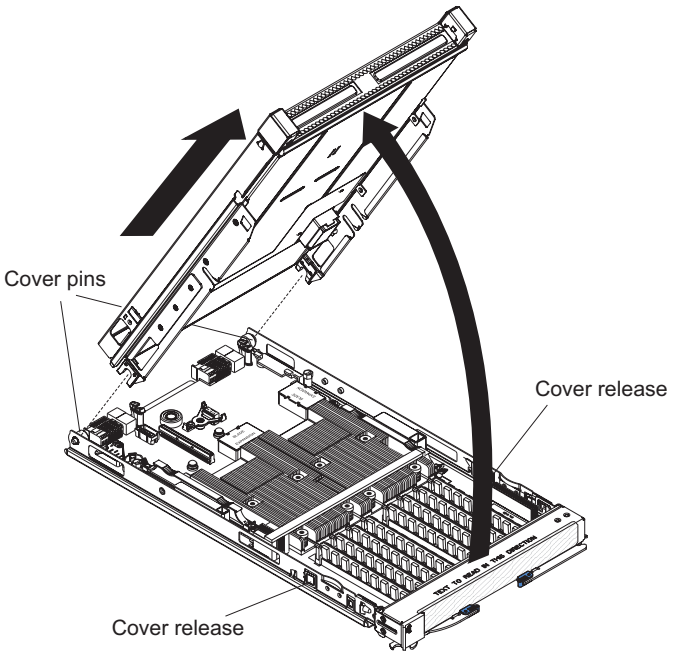

Figure 10. Removing the expansion unit

Complete the following steps to remove BladeCenter PCI Express I/O Expansion Unit:

1. Read the safety information beginning on page vii and “Installation guidelines” on page 19.
2. Carefully place the blade server on a flat, static-protective surface, with the expansion unit side facing up.
3. Press the blue blade cover release on each side of the blade server and lift the expansion unit (see Figure 10).
4. To remove the expansion unit, carefully lift it from the cover pins and set it aside.

Removing the blade-server front bezel assembly

Before you can add, remove, or replace system memory DIMM modules, replace a defective system board assembly, or replace the blade server front bezel assembly, you must first remove the blade server front bezel assembly.

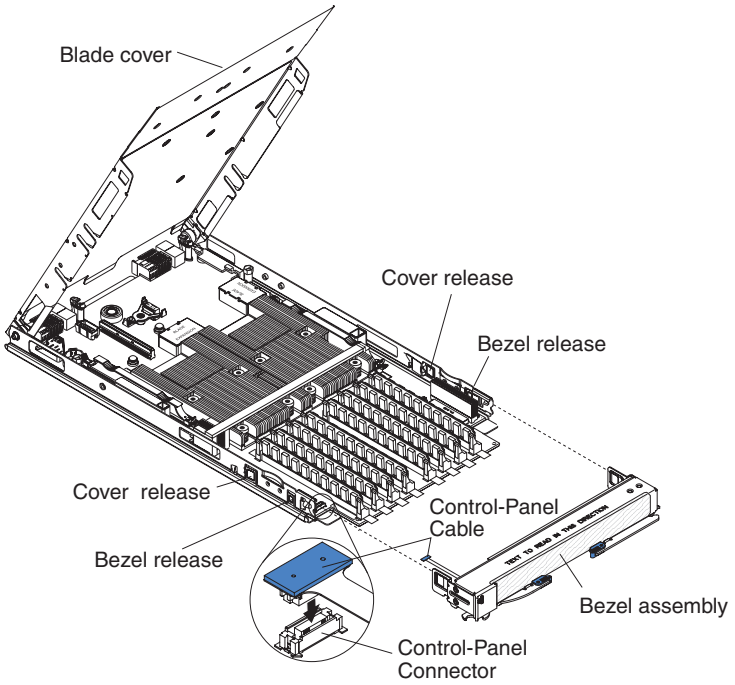

Figure 11. Removing the front bezel assembly

Complete the following steps to remove the front bezel assembly:

1. Read the safety information beginning on page vii and “Installation guidelines” on page 19.
2. If applicable, shut down the operating system, turn off the blade server, and remove the blade server from the BladeCenter unit. See “Removing the blade server from the BladeCenter unit” on page 20.
3. Open the blade server cover. See “Opening and removing the blade server cover” on page 21.
4. Carefully disconnect the control panel cable from the control panel connector (see Figure 11).
5. Press the front bezel release on both sides of the system board and pull the front bezel assembly away from the blade server.
6. Store the front bezel assembly in a safe place.

Installing the optional modular flash drive

The modular flash drive connects to the flash drive connector on the system board and provides non-volatile memory. This may be used, for example, for installing an operating system.

Complete the following steps to install the modular flash drive:

1. Read the safety information beginning on page vii and “Installation guidelines” on page 19.
2. If applicable, shut down the operating system, turn off the blade server, and remove the blade server from the BladeCenter unit. See “Removing the blade server from the BladeCenter unit” on page 20.
3. Open the blade server cover. See “Opening and removing the blade server cover” on page 21.

4. Locate the flash drive retention clip and connector on the system board.

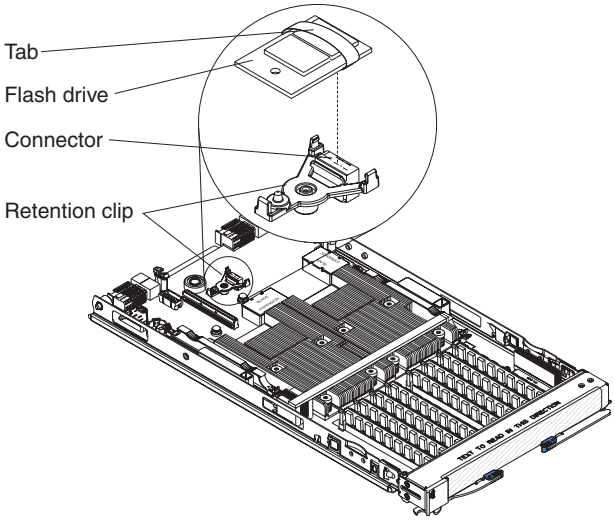

Figure 12. Fitting the modular flash drive

If you have already installed a high-speed expansion card, this card can block access to the connector and retention clip for the modular flash drive. If this is the case, remove the high-speed expansion card before installing the modular flash drive. You can reinstall the high-speed expansion card after installing the modular flash drive.

If applicable, complete these steps to remove the high-speed expansion card.

a. Lift the locking clip to the vertical position until the card moves upward and disengages from the connector.
b. If the card has a ball stud, hold the card at the handling area near the ball stud and pull it upward until the ball stud disengages with the ball socket.
c. Lift the card off the locator pins and set it aside on a static-protective surface.

For diagrams see “Installing an optional high-speed expansion card.”

5. Locate the connector on the back of the modular flash drive.
6. Carefully align the modular flash drive with the retention clip and connector on the system board. Ensure the orientation of the connector on the modular flash drive matches the connector on the system board.
7. Gently press the modular flash drive into position.
8. If applicable, reinstall the high-speed expansion card.

If you have other options to install, do so now. Otherwise, go to “Finishing the installation” on page 35.

Installing an optional high-speed expansion card

You can connect a high-speed expansion card, for example an InfiniBand card, to the high-speed connector on the system board. Use the two expansion card locator pins to assist with fitting the card. If your card has a ball socket, use the socket to lock the card in place.

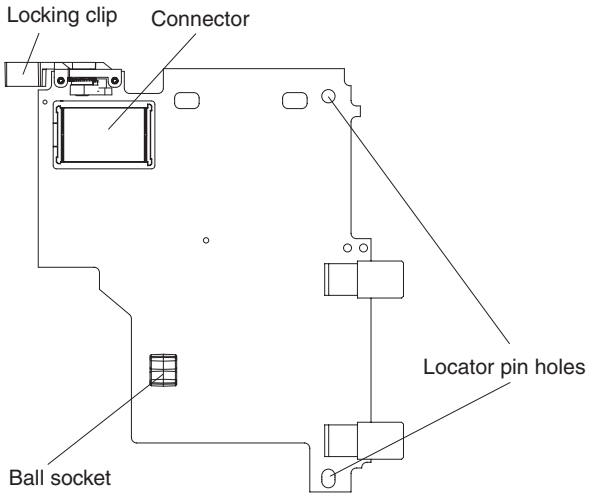

Figure 13. High-speed expansion card reverse view

Complete the following steps to install the high-speed expansion card:

1. Read the safety information beginning on page vii and “Installation guidelines” on page 19.
2. If applicable, shut down the operating system, turn off the blade server, and remove the blade server from the BladeCenter unit. See “Removing the blade server from the BladeCenter unit” on page 20.
3. Remove the blade server cover. See “Opening and removing the blade server cover” on page 21.
4. If you also want to install a modular flash drive, do this before you proceed with installing the high-speed expansion card. See “Installing the optional modular flash drive” on page 24.
5. Locate the high-speed connector on the system board.

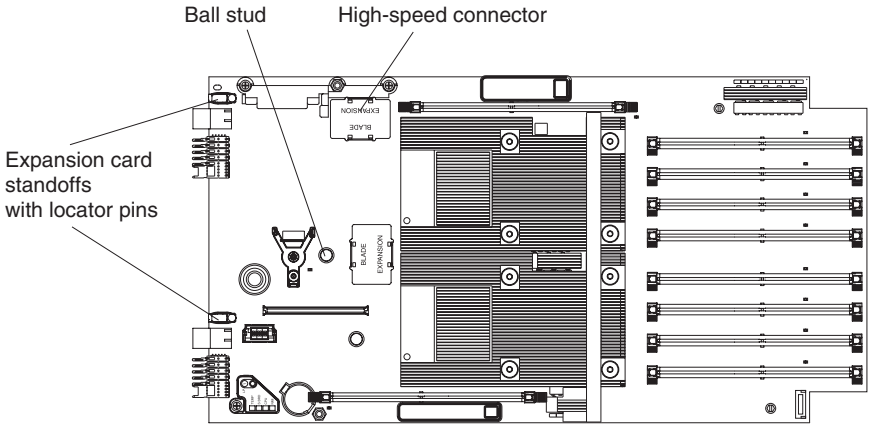

Figure 14. Expansion card connector, locator pins, and ball stud

6. Remove the connector cover.
7. Locate the expansion card locator pins on the standoffs at the back of the system board.
8. Locate the connector and the ball socket on the high-speed expansion card.

9. Slide the locator pin holes on the expansion card over the locator pins. The card rests on the locator pins.

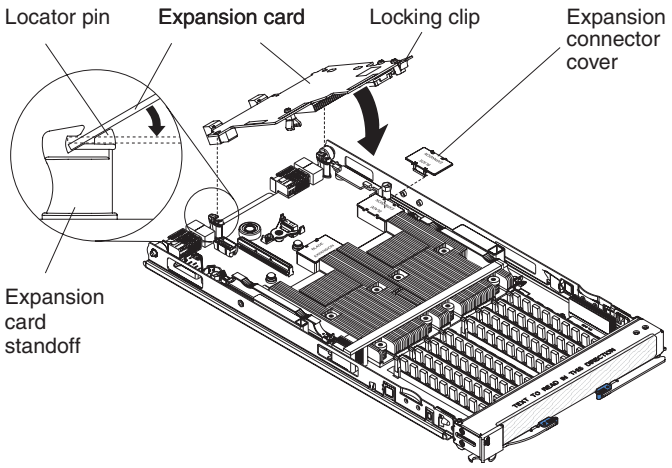

Figure 15. Positioning the high-speed expansion card

10. Carefully press the expansion card into position. Be sure that the ball socket on the card is over the corresponding ball stud on the main board. Use the blue areas only to avoid damage to the card.
11. Check that the blue locking clip is horizontal and that there is no gap between the card and the connector.

Attention: The connectors on the system board and the high-speed expansion card are not designed for repeated removal or replacement of components. Avoid removing the card once it is in position,

If you have other options to install, do so now. Otherwise, go to “Finishing the installation” on page 35.

Adding or changing system memory

There are 8 DIMM slots for system memory. Each IBM PowerXCell 8i processor has two memory channels and there are two DIMM slots per memory channel.

You can use VLP DDR2 1 GB, 2 GB, or 4 GB memory modules. The maximum memory configuration has a 4 GB memory module in each DIMM slot which provides 16 GB to each processor and 32 GB in total.

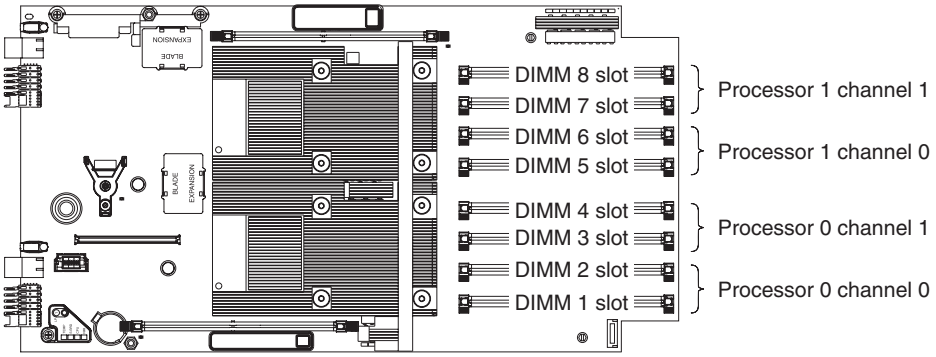

Figure 16. System memory DIMM slot locations

As shown in Figure 16, each processor has a channel 0 and a channel 1, with a pair of DIMM slots for each channel. To use a channel, you must populate both DIMM slots that belong to the channel.

All DIMM configuration listed in Table 1 are supported by the latest firmware level.

Table 1. Supported DIMM configurations

IBM PowerXCell 8i-0				**IBM PowerXCell 8i-1**			
Channel 0		**Channel 1**		**Channel 0**		**Channel 1**	
Slot 1	**Slot 2**	**Slot 3**	**Slot 4**	**Slot 5**	**Slot 6**	**Slot 7**	**Slot 8**
1 GB	1 GB			1 GB	1 GB		
1 GB	1 GB			2 GB	2 GB		
1 GB	1 GB			4 GB	4 GB		
2 GB	2 GB			1 GB	1 GB		
2 GB	2 GB			2 GB	2 GB		
2 GB	2 GB			4 GB	4 GB		
4 GB	4 GB			1 GB	1 GB		
4 GB	4 GB			2 GB	2 GB		
4 GB	4 GB			4 GB	4 GB		
1 GB	1 GB	1 GB	1 GB	1 GB	1 GB	1 GB	1 GB
1 GB	1 GB	1 GB	1 GB	2 GB	2 GB	2 GB	2 GB
1 GB	1 GB	1 GB	1 GB	4 GB	4 GB	4 GB	4 GB
2 GB	2 GB	2 GB	2 GB	1 GB	1 GB	1 GB	1 GB
2 GB	2 GB	2 GB	2 GB	2 GB	2 GB	2 GB	2 GB
2 GB	2 GB	2 GB	2 GB	4 GB	4 GB	4 GB	4 GB
4 GB	4 GB	4 GB	4 GB	1 GB	1 GB	1 GB	1 GB
4 GB	4 GB	4 GB	4 GB	2 GB	2 GB	2 GB	2 GB
4 GB	4 GB	4 GB	4 GB	4 GB	4 GB	4 GB	4 GB

To change the system memory configuration, complete the following steps:

1. Read the safety information beginning on page vii and “Installation guidelines” on page 19.

2. If applicable, shut down the operating system, turn off the blade server, and remove the blade server from the BladeCenter unit. See “Removing the blade server from the BladeCenter unit” on page 20.
3. Open the blade server cover. See “Opening and removing the blade server cover” on page 21.
4. Remove the front bezel assembly. See “Removing the blade-server front bezel assembly” on page 23 for details.
5. Locate the DIMM slots in which you want to insert the system memory modules. See Table 1 on page 28 and Figure 16 on page 28 for guidance.
6. Remove any modules that are to be replaced or that have become redundant.
   a. Open the retaining clips on either end of the DIMM slot. This lifts the DIMM and disengages it from the slot.
   b. Pull the DIMM out of the slot.
7. Insert the new DIMMs.
   a. Ensure that the retaining clips at both ends of the DIMM slot are in the open position.
   b. Place the DIMM in the slot, contact side down. Check the orientation of the module. The locating pin in the slot must match the corresponding cut-out on the module.
   c. Carefully press the module into place until the retaining clips snap into position. Make sure that the clips are locked properly.

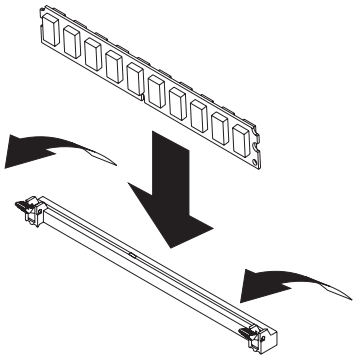

Figure 17. DIMM retaining clips

Note: Unused system memory slots do not require DIMM fillers.

If you have other options to install, do so now. Otherwise, go to “Finishing the installation” on page 35.

Adding or changing I/O buffer DDR2 memory modules

This section describes how to add I/O buffer memory. For instructions on how to add system memory see “Adding or changing system memory” on page 27.

Each IBM PowerXCell 8i companion chip has one DIMM slot for I/O buffer memory. The QS22 blade server supports VLP DDR2 1 GB DIMMs. You must add memory as a pair of DIMMs, one for each IBM PowerXCell 8i companion chip.

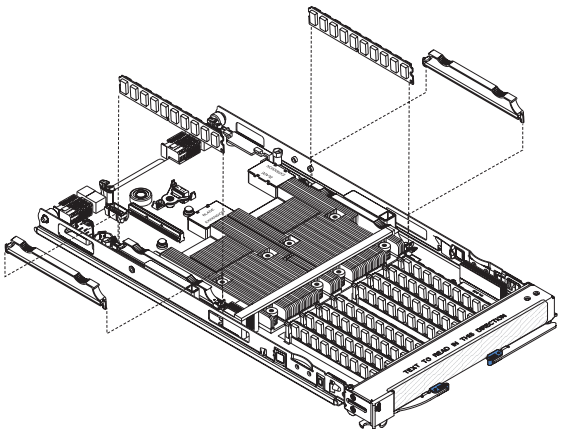

Figure 18. I/O buffer DIMM slot location

To install I/O buffer memory, complete the following steps:

1. Read the safety information beginning on page vii and “Installation guidelines” on page 19.
2. If applicable, shut down the operating system, turn off the blade server, and remove the blade server from the BladeCenter unit. See “Removing the blade server from the BladeCenter unit” on page 20.
3. Open the blade server cover. See “Opening and removing the blade server cover” on page 21.
4. Locate the DIMM slots for the I/O buffer DDR2 memory modules.

   There are two DIMM slots, one for each IBM PowerXCell 8i companion chip. The slots are labelled `IOBUF 1` and `IOBUF 2`. You must install a 1 GB DIMM for both IBM PowerXCell 8i companion chips.
5. Remove the DIMM fillers from the slots. Retain the DIMM fillers. They are an important part of the blade server cooling system and you need them if you ever remove the I/O buffer DIMMs from the blade server.
6. Place each DIMM in its slot, contact side down. Check the orientation of the modules. The locating pin in each slot must match the corresponding cut-out on the module.
7. Carefully press the modules into place until the retaining clips snap into place. Make sure that the clips are locked properly.

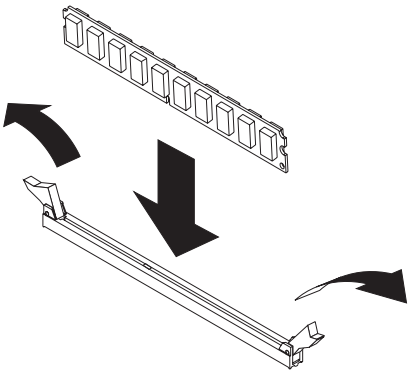

Figure 19. DIMM retaining clips

If you have other options to install, do so now. Otherwise, go to “Finishing the installation” on page 35.

Installing the optional SAS expansion card

The QS22 blade server does not have any built-in disk storage. The SAS expansion card allows you to use SAS attached storage. Use the blue handling areas to handle the card.

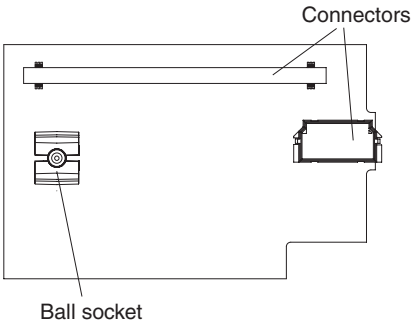

Figure 20. SAS expansion card reverse side

Complete the following steps to install the SAS expansion card:

1. Read the safety information beginning on page vii and “Installation guidelines” on page 19.
2. If applicable, shut down the operating system, turn off the blade server, and remove the blade server from the BladeCenter unit. See “Removing the blade server from the BladeCenter unit” on page 20.
3. Open the blade server cover. See “Opening and removing the blade server cover” on page 21.
4. Locate the two SAS expansion card connectors and the ball stud on the system board.

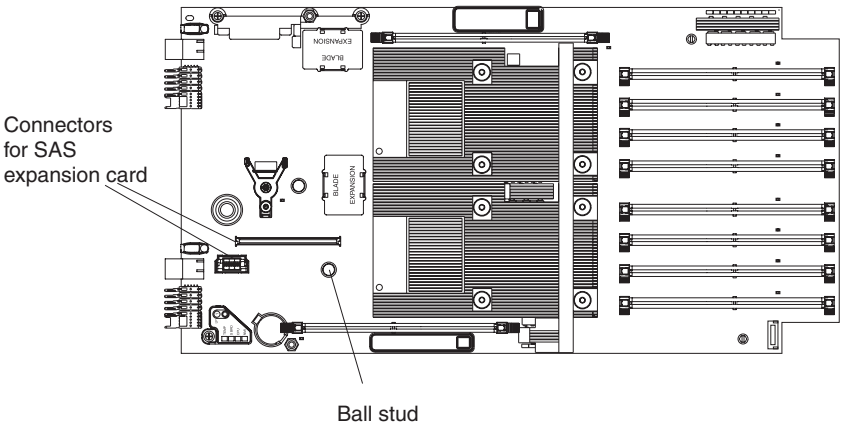

Figure 21. SAS expansion card connector and ball stud location

5. Locate the connectors and the ball socket on the SAS adapter card.
6. Align the connectors on the system board with the connectors on the SAS adapter card.

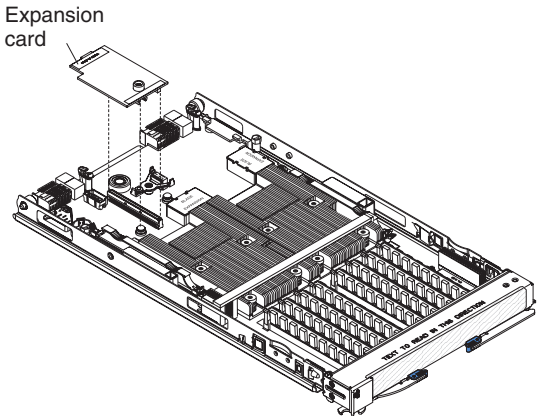

Figure 22. SAS expansion card location

7. Using the blue handling areas, carefully push the card down to insert it into the connectors. Ensure that the ball stud on the system board engages with the ball socket on the SAS expansion card.

If you have other options to install, do so now. Otherwise, go to “Finishing the installation” on page 35.

Installing the BladeCenter PCI Express I/O Expansion Unit

Important:

- A BladeCenter QS22 with the BladeCenter PCI Express I/O Expansion Unit installed takes up two contiguous slots in the BladeCenter chassis.
- You must remove any expansion card that uses the high-speed connector before installing the expansion unit.

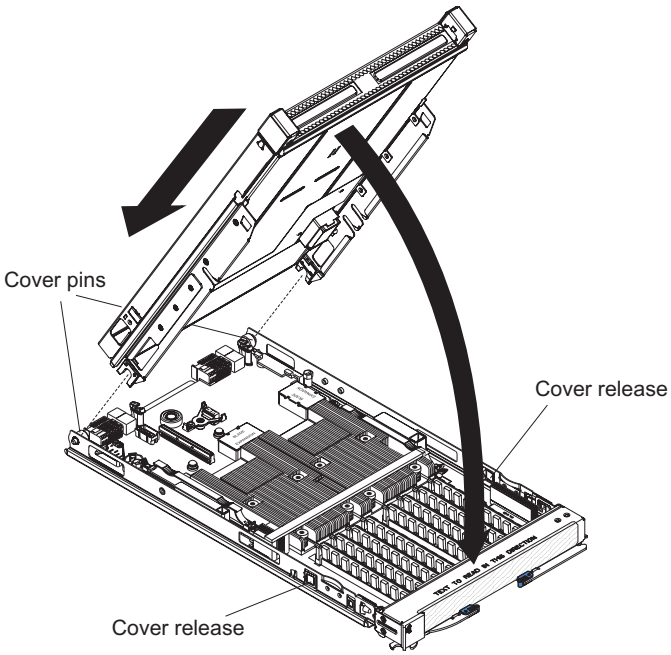

Figure 23. Installing the expansion unit

Complete the following steps to install the BladeCenter PCI Express I/O Expansion Unit:

1. Read the safety information beginning on page vii and “Installation guidelines” on page 19.
2. Remove the blade server cover and set it aside. See “Opening and removing the blade server cover” on page 21 for further information.
3. Remove the connector cover or any optional card from the high-speed connector. Figure 14 on page 26 shows the location of the high-speed connector.
4. Lower the expansion unit so that the slots at the rear slide down onto the cover pins at the rear of the blade server, as shown in Figure 23 on page 32.
5. Carefully close the expansion unit as shown in Figure 23 on page 32 until it clicks into place.

Replacing the battery

IBM has designed this product with your safety in mind. The lithium battery must be handled correctly to avoid possible danger. If you replace the battery, you must adhere to the following instructions.

Note: In the U. S., call 1-800-IBM-4333 for information about battery disposal.

If you replace the original lithium battery with a heavy-metal battery or a battery with heavy-metal components, be aware of the following environmental consideration. Batteries and accumulators that contain heavy metals must not be disposed of with normal domestic waste. They will be taken back free of charge by the manufacturer, distributor, or representative, to be recycled or disposed of in a proper manner.

To order replacement batteries, call 1-800-IBM-SERV within the United States, and 1-800-465-7999 or 1-800-465-6666 within Canada. Outside the U.S. and Canada, call your IBM authorized reseller or IBM marketing representative.

Note: After you replace the battery, the blade server is automatically reconfigured. However, you must reset the system date and time through the operating system that you installed.

Statement 2:

CAUTION:
When replacing the lithium battery, use only IBM Part Number 43W9859 or 03N2449 or an equivalent type battery recommended by the manufacturer. If your system has a module containing a lithium battery, replace it only with the same module type made by the same manufacturer. The battery contains lithium and can explode if not properly used, handled, or disposed of.

Do not:

- **Throw or immerse into water**
- **Heat to more than 100°C (212°F)**
- **Repair or disassemble**

Dispose of the battery as required by local ordinances or regulations.

Note: See “Battery return program” on page 88 for more information about battery disposal.

Complete the following steps to replace the battery:

1. Read the safety information beginning on page vii and “Installation guidelines” on page 19.
2. Follow any special handling and installation instructions that come with the battery.
3. If applicable, shut down the operating system, turn off the blade server, and remove the blade server from the BladeCenter unit. See “Removing the blade server from the BladeCenter unit” on page 20.
4. Remove the blade server cover. See “Opening and removing the blade server cover” on page 21.
5. Locate the battery (Battery holder J12) on the system board.

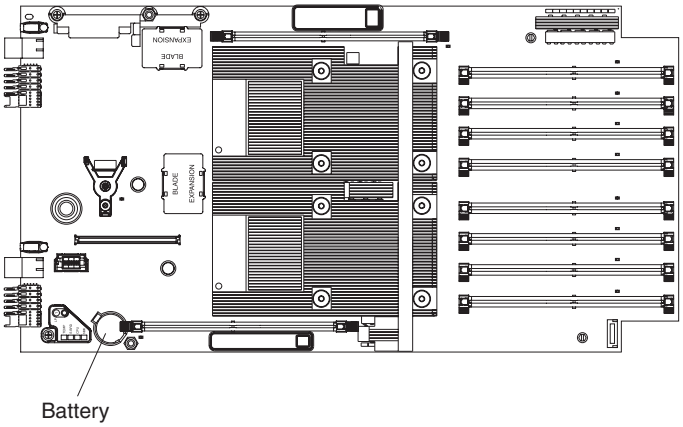

Figure 24. Battery location

6. Remove the battery:
   a. Use one finger to press the top of the battery clip away from the battery. The battery pops up when released.

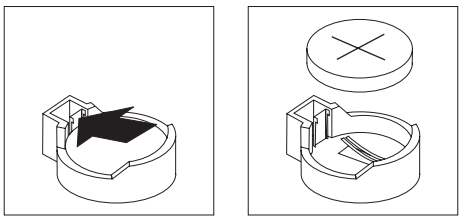

b. Use your thumb and index finger to lift the battery from the socket.
c. Dispose of the battery as required by local ordinances or regulations.

7. Insert the new battery:
   a. Make sure the positive (+) side is facing upwards.
   b. Tilt the battery so that you can insert it into the socket, under the battery clip.
   c. Press the battery down into the socket until it clicks into place. Make sure the battery clip holds the battery securely.
8. Close the blade server cover and insert the blade server into the BladeCenter unit (see “Closing the blade server cover” on page 37 and Chapter 3, “Installing the blade server,” on page 15).

   Statement 21:

   CAUTION:
   Hazardous energy is present when the blade server is connected to the power source. Always replace the blade cover before installing the blade server.
9. Turn on the blade server (see “Turning on the blade server” on page 9).
10. Reset the system date and time through the operating system that you installed. For additional information, see your operating system documentation.

Finishing the installation

To complete the installation you must:

1. Reinstall the front bezel assembly on the blade server if removed. See “Installing the front bezel assembly” on page 36 for further information.
2. Ensure that the I/O buffer DIMM slots are occupied either by DIMMs or by DIMM fillers. No DIMM fillers are needed for empty system memory DIMM slots.
3. Replace and close the blade server cover, unless you installed an optional expansion unit that has its own cover. See “Closing the blade server cover” on page 37 for further information.

   Statement 21:

   CAUTION:
   Hazardous energy is present when the blade server is connected to the power source. Always replace the blade cover before installing the blade server.

4. Reinstall the blade server into the BladeCenter unit. See Chapter 3, “Installing the blade server,” on page 15 for further information.
5. Turn on the blade server. See “Turning on the blade server” on page 9 for further information.
6. If you have replaced the battery or the system board assembly, reset the system date and time through the operating system that you installed. For additional information, see your operating system documentation.

Note: If you have just powered on the BladeCenter unit, wait until the power on LED on the blade server flashes slowly before powering on the blade server.

Installing the front bezel assembly

Figure 25 shows how to install the front bezel assembly on the blade server.

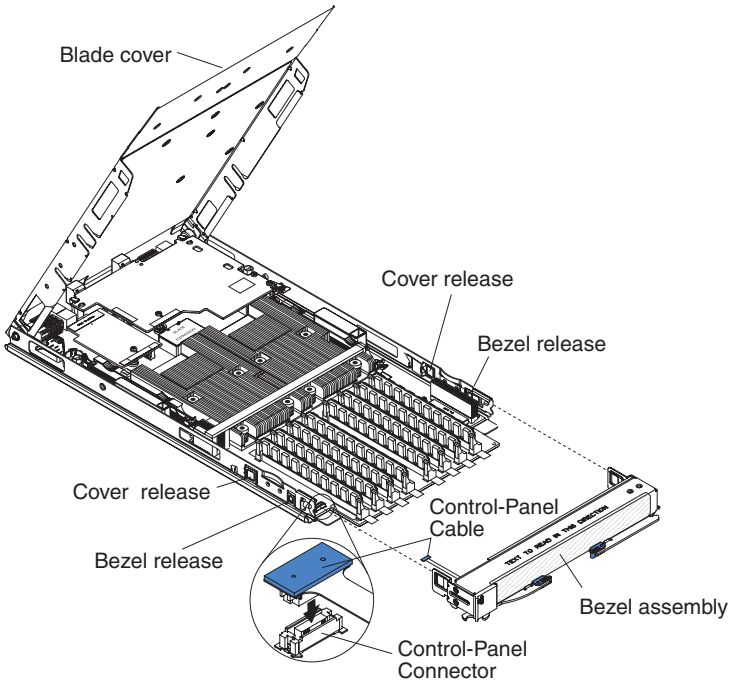

Figure 25. Installing the front bezel assembly

Complete the following steps to install the blade server front bezel assembly:

1. Read the safety information beginning on page vii and “Installation guidelines” on page 19.
2. Connect the control panel cable to the control panel connector on the system board assembly.
3. Carefully slide the front bezel assembly onto the blade server, as shown in Figure 25, until it clicks into place.

Note: Make sure that you do not pinch any cables when you reinstall the front bezel assembly.

Closing the blade server cover

Important: The blade server cannot be inserted into the BladeCenter unit until the cover is installed and closed or an expansion unit is installed. Do not attempt to override this protection.

Statement 21:

CAUTION:
Hazardous energy is present when the blade server is connected to the power source. Always replace the blade cover before installing the blade server.

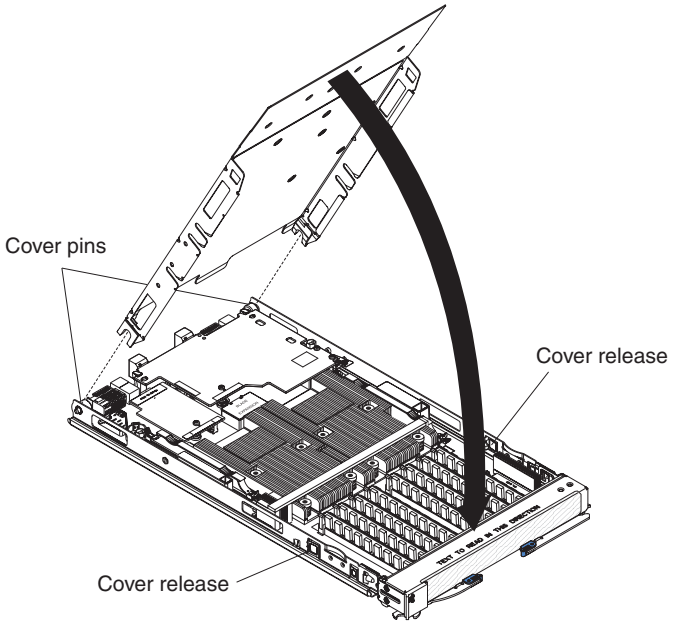

Figure 26. Closing the blade server cover

Complete the following steps to close the blade server cover:

1. Read the safety information beginning on page vii and “Installation guidelines” on page 19.
2. If you removed the front bezel assembly, replace it now. See “Installing the front bezel assembly” on page 36 for instructions.
3. Lower the cover so that the slots at the rear slide down onto the pins at the rear of the blade server, as shown in Figure 26. Before closing the cover, make sure that all components are installed and seated correctly and that you have not left loose tools or parts inside the blade server.
4. Pivot the cover to the closed position as shown in Figure 26 until it clicks into place.

Input/output connectors and devices

The BladeCenter unit contains the input/output connectors that are available to the blade server. See the documentation that comes with the BladeCenter unit for information about the input/output connectors.

Chapter 5. Configuring the blade server

This chapter describes how to:

- Communicate with a newly-installed blade server.
- Use System Management Services (SMS) to view and update the system firmware revision number. This does not require the operating system to be installed.
- Update the baseboard management controller (BMC) firmware using the update package and the Advanced Management Module.
- Update the system firmware using the command-line utility.
- Configure the Ethernet Gigabit dual-port controller in preparation for a network installation of the operating system.

Note: You can update the BMC firmware through the Advanced Management Module Web interface without booting the operating system. However, to update the BMC using the update package or system firmware you must boot the operating system first. For information about installing the operating system, see Chapter 6, “Installing the operating system,” on page 55.

Communicating with the blade server

You do not have to boot the operating system before you can communicate with the QS22 blade server. You can access it through:

Advanced Management Module
The Web-based management and configuration program. This is your main access method to the blade server.

The command-line interface
See “Using the command-line interface” on page 40 for further information.

Serial over LAN (SOL)
This is similar to the serial interface, but allows you to connect to the blade server over the network. See “Using Serial over LAN” on page 40 for further information.

The serial interface
You can connect a PC or compatible terminal directly to the BladeCenter unit. For BladeCenter H and BladeCenter HT you make this direct connection using a special cable, for BladeCenter S you use a special module. See “Using the serial interface” on page 41 for further information.

Note: The BladeCenter unit Serial Breakout cable (or module for BladeCenter S) is not supplied with the unit and must be ordered separately.

System Management Services (SMS)
The SMS utility allows you to view and update the VPD, change the boot device and set network parameters. See “Using the SMS utility program” on page 41 for further information.

Using the Advanced Management Module

The Advanced Management Module is the main means of administering the BladeCenter system. Use the Advanced Management Module Web-based management and configuration program to:

- Configure the BladeCenter unit
- Update and configure BladeCenter components including the QS22 blade server
- Monitor the current system status
- Check the event log for system and other errors

Using the Web interface

Complete the following steps to start the Web-based management and configuration program:

1. Open a Web browser. In the address or URL field, type the Internet protocol (IP) address or host name that is assigned for the Management Module remote connection. The default IP address is:

   192.168.70.125

   The Enter Network Password window opens.
2. Type your user name and password. Before you log in to the Advanced Management Module for the first time, contact your system administrator regarding whether your organization has assigned a user name and password to you. Use the initial (default) user name and password the first time that you log in to the Advanced Management Module. If you have an assigned user name and password, use them for all subsequent logins. All login attempts are documented in the event log.

   The initial user ID and password for the Advanced Management Module are:

   User ID
   USERID (all capital letters)

   Password
   PASSW0RD (note the number zero, not the letter O, in PASSW0RD)
3. Follow the instructions that appear on the screen. Be sure to set the timeout value that you want for your Web session.

The BladeCenter management and configuration window opens.

For additional information, see the *IBM BladeCenter Advanced Management Module User's Guide*.

Using the command-line interface

The IBM BladeCenter Advanced Management Module also provides a command-line interface to provide direct access to BladeCenter management functions. You can use this as an alternative to using the BladeCenter Management Module Web interface.

Through the command-line interface, you can issue commands to control the power and configuration of the blade server and other components in the BladeCenter unit. For information and instructions, see the *IBM BladeCenter Management Module Command-Line Interface Reference Guide*.

Using Serial over LAN

To establish a Serial over LAN (SOL) connection to the blade server, you must configure the SOL feature for the blade server and start an SOL session as described in the*IBM BladeCenter Serial over LAN Setup Guide*. In addition, the Advanced Management Module must be configured as described in the *IBM BladeCenter Management Module User's Guide*, and the BladeCenter unit must be configured as described in the *IBM BladeCenter Serial over LAN Setup Guide*.

Using the serial interface

Use the serial interface to:

- Observe firmware progress.
- Run the SMS Utility program
- Access the Linux terminal in order to configure Linux.

You can connect a PC serially through the BladeCenter unit using a specific UART cable. To connect to the serial console, plug the serial cable into the BladeCenter unit and connect the other end to a serial device or computer with a serial port. For more information, see the *Installation and User's Guide* for your BladeCenter unit.

Set the following parameters for the serial connection on the terminal client:

- 115200 baud
- 8 data bits
- No parity
- One stop bit
- No flow control

By default, the blade server sends output over SOL and to the serial port on the BladeCenter unit. However, the default for input is to use SOL. If you wish to use a device connected to the serial port for input you must press any key on that device while the blade server boots.

Using the SMS utility program

The Advanced Management Module is the main means of administering the BladeCenter unit and the blade servers. However, another utility is provided which in some cases can give more information than that displayed in the Advanced Management Module. This is the System Management Services (SMS) utility program.

The SMS utility program allows you to view and update the VPD, change the boot list and set network parameters.

Starting SMS

Complete the following steps to start SMS:

1. Using a Telnet or SSH client, connect to the Advanced Management Module external Ethernet interface IP address.
2. When prompted, enter a valid user ID and password. The default management module user ID is USERID, and the default password is PASSW0RD, where the 0 is a zero.

   Note: The user ID and password may have been changed. If so, check with the system administrator for a valid id and password.
3. Power cycle the blade server and start an SOL console session by using the `power -cycle -c` command.

   For example, to power cycle and start an SOL remote text console with a blade server that is in the first bay of the BladeCenter unit, issue the command:

   ```
   power -cycle -c -T system:blade[1]
   ```

   To open a console session with a blade that is already powered on, use the command:

   ```
   console -T system:blade[1]
   ```

4. After approximately 30 seconds, you see a sequence of checkpoint codes displayed on the console. These codes are generated by the Power On Self Test (POST).
5. When the POST menu and indicators displays a screen similar to:

```
QS22 Firmware Starting
 Check ROM  = OK
 Build Date = Jan  4 2008 11:31:29
 FW Version = "QD-1.26.0-0"

Press "F1" to enter Boot Configuration (SMS)
Press "F2" to boot once from CD/DVD
```

Press **F1** to display the SMS menu.

Viewing FRU information

The VPD on each blade server contains details about the machine type or model, serial number and the universal unique ID.

Complete the following steps to see this information:

1. Start SMS by completing the steps in “Starting SMS” on page 41. The SMS menu appears:

```
 PowerPC Firmware
 Version QD0123000
 SLOF-SMS 1.1 (c) Copyright IBM Corp. 2007 All rights reserved.
-------------------------------------------------------------------------------
 Main Menu
  1. Select Language
  2. Setup Remote IPL (Initial Program Load)
  3. Change SCSI Settings
  4. Select Console
  5. Select Boot Options
  6. Firmware Boot Side Options
  7. Progress Indicator History
  8. FRU Information
  9. Change SAS Boot Device




-------------------------------------------------------------------------------
 Navigation Keys:

                                     X = eXit System Management Services
-----------------------------------------------------------------------------
 Type menu item number and press Enter or select Navigation key:

-----------------------------------------------------------------------------
```

2. Type **8** to select FRU Information. A screen similar to the following appears:

```
PowerPC Firmware
 Version QD0123000
 SLOF-SMS 1.1 (c) Copyright IBM Corp. 2007 All rights reserved.
--------------------------------------------------------------------------------
 FRU Information

  Machine Type and Model: 079338x

  Machine Serial Number: ABCDEFG

  Universal Unique ID: 12345678-1234-1234-1234-123456789ABC





--------------------------------------------------------------------------------
 Navigation Keys:
 M = return to Main Menu
 ESC key = return to previous screen      X = eXit System Management Services
--------------------------------------------------------------------------------
 Select Navigation key :
```

Note: You cannot change the FRU information from this screen, only view it.

Updating the system and BMC firmware

The firmware consists of two distinct packages:

- A firmware package for the baseboard management controller (BMC). This is referred to as the BMC firmware.
- A firmware package for the basic input/output system (BIOS) which runs on the IBM PowerXCell 8i processor. This is referred to as system firmware.

Note: The user and operating system interfaces of the system firmware are based on the Open Firmware standard. Detailed system information is provided through the Open Firmware device tree. You can use the client interface and Run-Time Abstraction Services (RTAS) to run management functions.

BMC firmware

- Communicates with advanced management module
- Controls power on
- Initializes the board, including the IBM PowerXCell 8i processors and clock chips
- Monitors the physical board environment

System firmware

- Takes over when the BMC has successfully initialized the board
- Acts as the basic input/output system (BIOS)
- Includes boot-time diagnostics and power-on self test
- Prepares the system for the operating system boot

The packages are delivered separately and do not follow the same versioning scheme.

IBM periodically makes updates to both BMC and system firmware. These may be downloaded from http://www.ibm.com/support/us/en/.

Note: To avoid problems and to maintain proper system performance, always make sure that both the BMC firmware and the system firmware are at the same level for all QS22 blade servers within the BladeCenter unit.

Updating steps

Complete the following steps to update the BMC and system firmware images:

1. Check the revision level of the firmware on the blade server and the level of the updates on http://www.ibm.com/support/us/en/. If the level on the Web site is higher than the version currently installed, continue with the updating steps.
2. Download the firmware updates.
3. Power off the blade server you wish to update.
4. Update the BMC firmware using the BMC update package or the Advanced Management Module. See “Updating the BMC firmware” on page 45 for further information.
5. Power on the blade server. This boots it with the new BMC firmware.
6. Update the system firmware image. See “Installing the system firmware” on page 47 for further information.
7. The system reboots. This boots the blade server with the new system firmware.
8. Shut down the blade server.

Note: There may be instances where you must update the BMC firmware before updating the system firmware. Check the *readme* file that comes with each firmware package for more information.

Determining current blade server firmware levels

Complete the following steps to view the current firmware code levels for both the BMC and the system firmware:

1. To check the BMC firmware level, access and log on to the Advanced Management Module Web interface as described in the *Management Module User's Guide*.
2. From the **Monitors** menu section, select **Firmware VPD**:

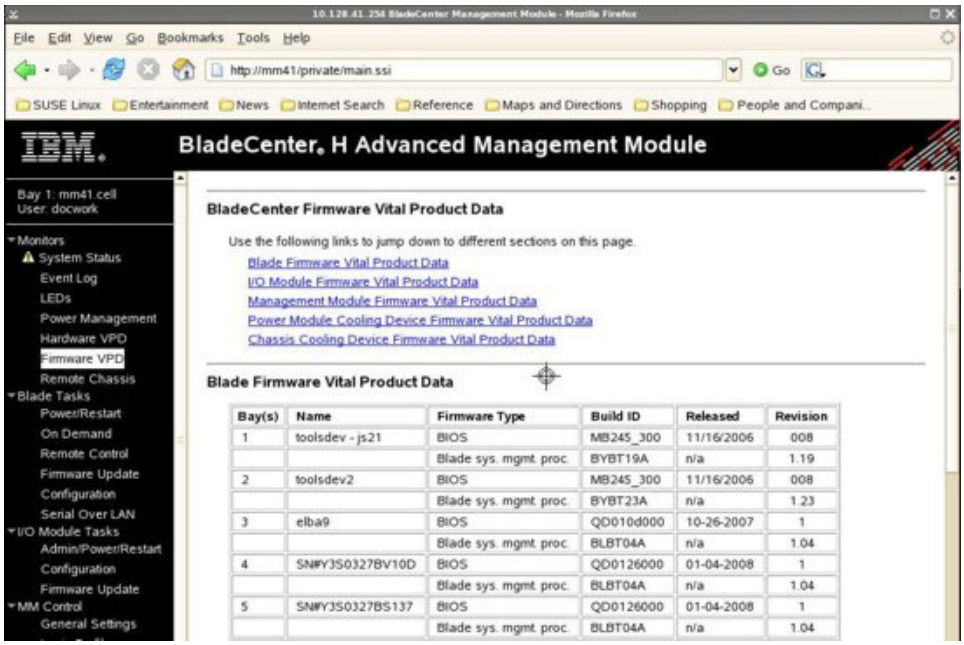

The **Blade Server Firmware Vital Product Data (VPD)** window shows the build identifier, release, and revision level of both the system firmware/BIOS and the BMC firmware. In the example above, the system firmware or BIOS version is QB01020000 and the BMC firmware is BLBT06b.

Compare this information to the firmware information provided at http://www.ibm.com/support/us/en/. If the two match, then the blade server has the latest firmware. If not, download the firmware package from the IBM Support Web site. See “Updating the BMC firmware” or the IBM Support Web site for installation instructions.

You can also view the system firmware level from within the operating system by using the following command:

```
xxd /proc/device-tree/openprom/ibm,fw-vernum_encoded
```

Output is similar to:

```
0000000: 5142 3031 3031 3030 3000 00             QB0101000..
```

where `QB0101000` is the system firmware version.

Note: The system firmware version displayed by the BladeCenter Advanced Management Module might be different from the version displayed by your operating system. Cross-reference information is given in the firmware information at http://www.ibm.com/support/us/en/, and in the *readme* file which comes with the firmware image.

Updating the BMC firmware

You can update the BMC firmware from the Linux prompt using the update package or from the Advanced Management Module.

Using the BMC update package

Complete the following steps to update the BMC firmware from the Linux command prompt:

1. Check the README that comes with the BMC firmware as it contains specific information about that particular firmware release.
2. Boot the blade server and the operating system.
3. Download the package from the IBM support site at http://www.ibm.com/support/us/en/. The update package has a `.sh` extension.
4. Change to the directory where you have downloaded the package.
5. Run the package using the `-s` option.
6. Reboot the blade server.

Using the Advanced Management Module

Complete the following steps to update the BMC firmware:

1. Download the BMC firmware image file from http://www.ibm.com/support/us/en/ to a suitable location on a server that is accessible on the network.
2. Uncompress the .zip file. The BMC firmware image file name has the format `BLBT<version number>.zip`.
3. Power off the blade you want to update.
4. Log in to the Advanced Management Module Web interface.
5. Click **Firmware Update** from the Blade Tasks submenu at the left of your screen. The following screen appears:

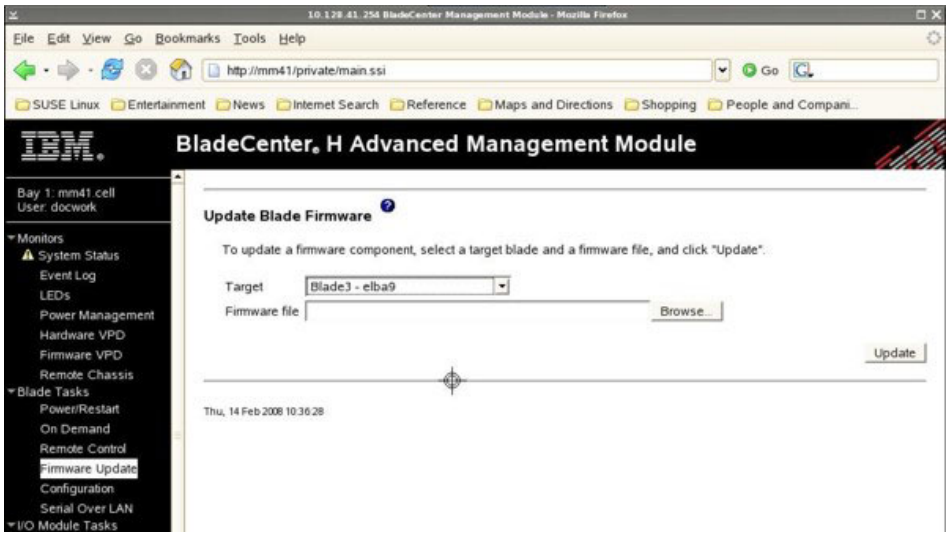

6. Choose the blade you want to update (target) and browse to the firmware image file.
7. Click on **Update**.
8. The validity of the image is checked, then the following screen appears:

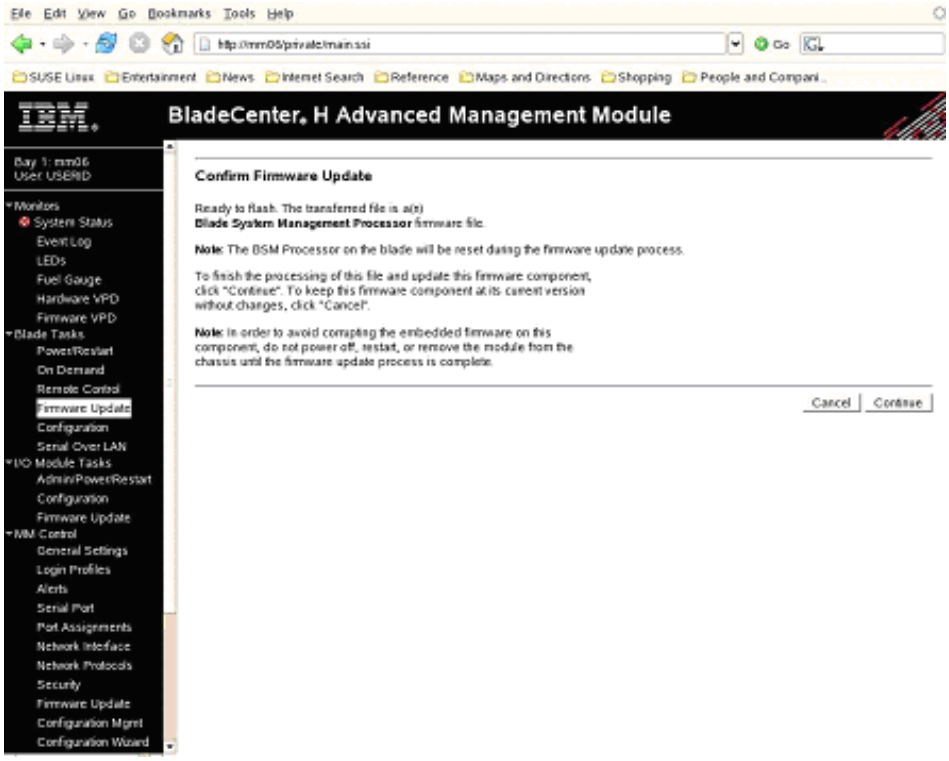

Click **Continue**.

9. The next screen shows the firmware update progress:

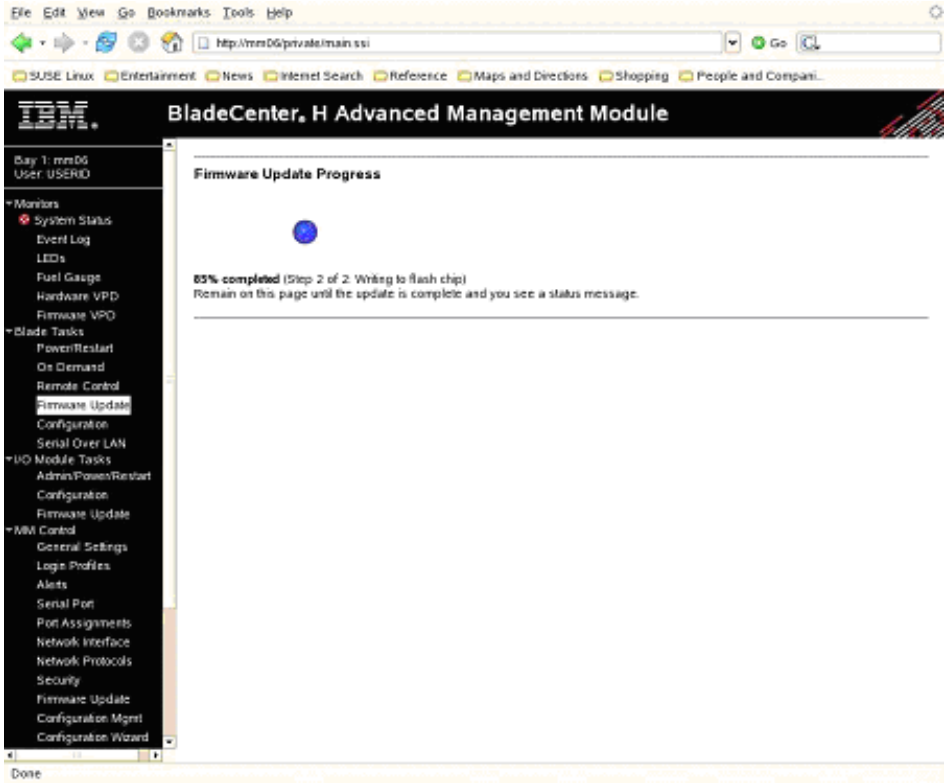

When the update is finished, a confirmation message appears and an entry is placed in the Advanced Management Module log.

10. Power up and boot the blade server.

Note: QS22 firmware contains a proprietary implementation of Cell Broadband Engine™ hardware initialization code.

Installing the system firmware

System firmware can only be installed after the operating system has booted. If the operating system is not installed or cannot boot, then no upgrade or recovery is possible. See the other sections of the manual Chapter 7, “Solving problems,” on page 61 for further information about troubleshooting the QS22 blade server.

You can update the system firmware:

- Through IBM Director. See the IBM Director documentation on the *IBM Director* CD for further information.
- Using the update package available from http://www.ibm.com/support/us/en/. See “Updating the system firmware automatically” on page 49 for further information on how to perform an update.
- Using the `update_flash` script available on supported Linux operating systems. This requires the system firmware image file. See “The firmware update package” on page 48 for information about how to extract the file.
- Updating the firmware manually. See “Installing the firmware manually” on page 49 for further information.

For all the above options Linux needs to have a current version of `rtas_flash` device driver installed. This is normally installed with the operating system. If it is not, see the installation guide for the Software Development Kit for Multicore Acceleration for instructions about how to get this device driver and install it.

Note: You may have to update the BMC before updating the system firmware. See the *README* file that comes with the package.

The firmware update package

You can now update firmware using the update packages available from http://www.ibm.com/support/us/en/. These can be installed either through IBM Director or by executing the `.sh` file contained in the package. This section describes how to use the update package to install the firmware update or extract the firmware image for manual installation.

To install the firmware package using IBM Director, see the documentation on the *IBM Director* CD.

Note: The blade server must be configured and have a running Linux operating system before the package can be extracted or installed.

The update package consists of 4 files:

- A file containing the change history for the QS22 system firmware. This has a `.chg` extension.
- A file containing the update package. This has an `.sh` extension.
- A readme file for the update package. This contains specific installation and configuration information.
- An XML file. This file is for use by IBM Systems Management tools, including IBM Director Update Manager, UpdateXpress CD, and UpdateXpress System Pack Installer.

Using the package

The package consists of an file with a .sh extension that runs from the Linux prompt. It has a number of options. To see what options are available, run the package without any options or with the `-h` switch:

```
# ./ibm_fw_bios_qb-1.9.1-2_linux-pq_cell.sh
```

In this example, `ibm_fw_bios_qb-1.9.1-3_linux-pq_cell.sh` is the name of the firmware update package. The file name changes according to the version of the firmware.

A screen similar to the following appears:

```
Usage:
  -x /someDirectory - Extract the payload to <some directory>
  -xr /someDirectory - Extract the payload plus PkgSdk files to <some directory>
  -xd /dev/fd0 - Create a DOS bootable diskette - Internel floppy drive
  -xd /dev/sda - Create a DOS bootable diskette - External USB floppy drive
  -u - Perform update unattended
  -h - Display this help screen
  ++debug - Display helpful debug information

Note:
All other command line arguments are passed to the
payload executable
```

The `-xd` options are not supported on the QS22 blade server.

The `-x` option

This enables to extract another executable file, in this example `ibm_fw_bios_qb-1.9.1-2.sh` which in turn may be run to create the `.bin` file required if you wish to update the firmware manually. See “Installing the firmware manually” on page 49 for further information.

The -u option

This performs an unattended and automatic update of the system firmware. The blade server reboots automatically as part of the update process.

Updating the system firmware automatically

Complete the following steps to update the firmware automatically using the update package:

1. Check the README before attempting to update the system firmware as it contains specific information about the particular firmware release.
2. Download the update package from http://www.ibm.com/support/us/en/. The update package has a `.sh` extension.
3. Change to the directory where you have downloaded the package.
4. Run the package with the `-u` option. Using the example from above, at the command prompt enter:

   ```
   ./ibm_fw_bios_qb-1.9.1-2_linux-pq_cell.sh -u
   ```
5. Check the system firmware images to confirm the update has succeeded. See "Determining current blade server firmware levels" on page 44 for instructions.

Installing the firmware manually

If you cannot update the firmware using the `update_flash` script, it is possible to update the firmware manually. You can use `rtas_flash` over `/proc`.

Complete the following steps to install the firmware manually:

1. Download the update package from http://www.ibm.com/support/us/en/.
2. Extract the system firmware image package. At the command prompt enter:

   ```
   ./<update package> -x <target directory>
   ```

   For example, to extract the image package `ibm_fw_bios_qb-1.9.1-2.sh` from `ibm_fw_bios_qb-1.9.1-2_linux-pq_cell.sh` in the directory `/temp/fwimage` enter:

   ```
   ./ibm_fw_bios_qb-1.9.1-2_linux-pq_cell.sh -x /temp/fwimage
   ```

   If the directory does not exist the firmware package creates it.
3. Change to the directory containing the firmware image package.
4. Extract the firmware image. At the command prompt enter:

   ```
   ./<image package> -x
   ```

   For example, to extract the image file `QB-1.9.1-2-boot_rom.bin` from `ibm_fw_bios_qb-1.9.1-2.sh` enter:

   ```
   ./ibm_fw_bios_qb-1.9.1-2.sh -x
   ```
5. Ensure the `rtas_flash` driver is loaded. To do this, run `lsmod`.
6. If the module is not yet in the kernel, invoke the following to load it:

   ```
   modprobe rtas_flash
   ```
7. To update your current firmware, copy the image file to `/proc/ppc64/rtas/firmware_update` and reboot manually:

   ```
   cp <image-file> /proc/ppc64/rtas/firmware_update
   shutdown –r now
   ```

   For example, to copy the image file `cp QB-1.9.1-2-boot_rom.bin` to `/proc/ppc64/rtas/firmware_update` enter:

   ```
   cp QB-1.9.1-2-boot_rom.bin  /proc/ppc64/rtas/firmware_update
   shutdown –r now
   ```

8. Once the system reboots, update the system firmware images. See “Updating the system firmware images” for instructions.

Updating the system firmware images

Once the system firmware is updated, the QS22 blade server boots from the new firmware. However, there are always two copies of the system firmware image on the blade server:

TEMP This is the firmware image normally used in the boot process. When the firmware is updated, it is the TEMP image that is replaced.

PERM This is a backup copy of the system firmware boot image. The blade server only boots from this image if the TEMP image is corrupt. See “Recovering the system firmware code” on page 66 for further information about how to recover from a corrupt TEMP image.

Once you have updated the system firmware and booted the blade server, you should copy the TEMP image to the PERM image. This ensures that the PERM and TEMP images are at the same revision level. The TEMP and PERM images should always be at the same revision level.

There are two commands you can use to update an old image on PERM.

- From the Linux prompt issue the following command:

  ```
  update_flash -c
  ```

  Note: The script checks whether the board has booted from the TEMP image. If not, the script does not complete.
- From the Linux prompt issue the following command:

  ```
  echo 0 > /proc/rtas/manage_flash
  ```

For more information on booting from the TEMP or PERM images, see “Recovering the system firmware code” on page 66.

Updating the optional expansion card firmware

If you have installed the SAS optional expansion card or a high-speed expansion card, for example the InfiniBand card, you may have to update the firmware. See the documentation that comes with the components for instructions about how to update the firmware.

IBM periodically makes updates available for both SAS and high-speed expansion cards. These may be downloaded from http://www.ibm.com/support/us/en/.

Integrating the Gigabit Ethernet controller into the BladeCenter

One dual-port Gigabit Ethernet controller is integrated on the blade server system board. Each controller port provides a 1000-Mbps full-duplex interface connecting to one of the Ethernet Switch Modules in I/O bays 1 and 2 of the BladeCenter unit, which enables simultaneous transmission and reception of data on the Ethernet local area network (LAN).

Each Ethernet-controller port on the system board is routed to a different switch module in I/O bay 1 or bay 2. The routing from the Ethernet-controller port to the I/O bay varies according to whether an Ethernet adapter is enabled and the operating system that is installed. See “Blade server Ethernet controller

enumeration” on page 52 for information about how to determine the routing from the Ethernet-controller ports to I/O bays for your blade server.

You do not have to set any jumpers or configure the controller for the blade server operating system. However, you must install a device driver to enable the blade server operating system to address the Ethernet-controller ports. For device drivers and information about configuring your Ethernet controller ports, see the Ethernet software documentation that comes with your blade server, or contact your IBM marketing representative or authorized reseller. For updated information about configuring the controllers, go to the Barcelona Computing Centre Web site at http://www.bsc.es/projects/deepcomputing/linuxoncell/.

Note: If your blade server contains a different type of optional Ethernet-compatible switch module in I/O bay 1 than the switch modules that are mentioned in this section, see the documentation that comes with the Ethernet switch module that you are using.

Updating the Ethernet controller firmware

To update the Ethernet controller firmware, you must download an update package from http://www.ibm.com/support/us/en/. This section describes how to use the update package to install the firmware update.

The update package consists of four files:

- A file containing the change history for the QS22 Ethernet Controller firmware. This has a .chg extension.
- A file containing the update package. This has an .sh extension.
- A readme file for the update package. This contains specific installation and configuration information.
- An XML file. This file is for use by IBM Systems Management tools, including IBM Director Update Manager, UpdateXpress CD, and UpdateXpress System Pack Installer.

Using the update package

The package consists of an file with a .sh extension that runs from the Linux prompt. It has a number of options. To see what options are available, run the package without any options or with the -h switch:

```
# ./brcm_fw_nic_2.0.3-e-1_rhel5_cell.sh
```

In the example shown above, `brcm_fw_nic_2.0.3-e-1_rhel5_cell.sh` is the name of the firmware update package. The file name changes according to the version of the firmware.

A screen similar to the following appears:

```
Usage:
-x /someDirectory - Extract the payload to <some directory>
-xr /someDirectory - Extract the payload plus PkgSdk files to <some directory>
-xd /dev/fd0 - Create a DOS bootable diskette - Internel floppy drive
-xd /dev/sda - Create a DOS bootable diskette - External USB floppy drive
-u - Perform update unattended
-h - Display this help screen
++debug - Display helpful debug information
```

The `-xd` and `-x` options are not supported on QS22.

The -u option performs an unattended and automatic update of the firmware. The blade server reboots automatically as part of the update process.

Firmware update steps

Complete the following steps to update the firmware automatically:

1. Check the README before attempting to update the system firmware as it contains specific information about the particular firmware release.
2. Download the update package from http://www.ibm.com/support/us/en/. The update package has a .sh extension.
3. Change to the directory where you have downloaded the package.
4. Run the package with the -u option. Using the example from above, at the command prompt enter:

   ```
   ./ brcm_fw_nic_2.0.3-e-1_rhel5_cell.sh -u
   ```

During the update process, messages similar to the following appear on the console:

```
[root@c4b14 brcm-2.0.3-ppc]# ./ brcm_fw_nic_2.0.3-e-1_rhel5_cell.sh -u
IBM Ethernet Firmware Update Tool, Version 1.0.2


Warning. No Broadcom NetXtreme II adapters found.

    ADAPTER MAC         BOOT    IPMI    ASF     PXE     UMP
-------------------     ----    ----    ---     ---     ---
001A640E030C (5704s)    3.21    2.20    NA      NA      NA
001A640E030D (5704s)    NA      NA      NA      NA      NA

Updating Broadcom NetXtreme adapters.
Updating 001A640E030C using file 16A8bc.bin     ---> Update successful
Updating 001A640E030C using file 16A8ipmi.bin   ---> Update successful
Error! Firmware not detected on device 001A640E030D.

Warning. No Broadcom NetXtreme II adapters found.

    ADAPTER MAC         BOOT    IPMI    ASF     PXE     UMP
-------------------     ----    ----    ---     ---     ---
001A640E030C (5704s)    3.38    2.47    NA      NA      NA
001A640E030D (5704s)    NA      NA      NA      NA      NA


One or more errors occurred during the firmware update process. See /var
```

Note: The error message shown above is correct as it refers to an adapter not available on QS22.

Blade server Ethernet controller enumeration

The enumeration of the Ethernet controller or controller ports in a blade server is operating system dependent. You can verify the Ethernet controller or controller port designations that a blade server uses through your operating system settings.

The routing of an Ethernet controller or controller port to a particular BladeCenter unit I/O bay depends on the type of Ethernet controller that is installed. You can verify which Ethernet-controller port is routed to which I/O bay by using the following test:

1. Install only one Ethernet switch module or pass-thru module, in I/O bay 1.
2. Make sure that the ports on the switch module or pass-thru module are enabled (**Switch Tasks → Management → Advanced Switch Management** in the BladeCenter Management Module Web interface).

3. Enable only one of the Ethernet-controller ports on the blade server. Note the designation that the blade server operating system has for the controller port.
4. Ping an external computer on the network connected to the Ethernet switch module. If you can ping the external computer, the Ethernet-controller port that you enabled is associated with the switch module in I/O bay 1. The other Ethernet-controller port in the blade server is associated with the switch module in I/O bay 2.

Communications from optional I/O expansion cards are routed to I/O bays 3 and 4. If you have installed an I/O expansion card on the blade server you can verify which controller port on an expansion card is routed to which I/O bay by performing the same test, using a controller on the expansion card and a compatible switch module or pass-thru module in I/O bay 3 or 4.

Finishing the configuration

You do not have to set any passwords to use the blade server. If you change the battery or replace the system-board assembly, you must reset the date and time through your operating system.

For information about setting up your network configuration for remote management, see the *IBM BladeCenter Planning and Installation Guide* or the *Installation and User's Guide* for your BladeCenter unit. You can find this documentation at http://www.ibm.com/support/us/en/.

Chapter 6. Installing the operating system

The QS22 blade server supports Red Hat Enterprise Linux 5.2 or later. Fedora (Fedora 7 and later) can be installed and supported from the Open Source only. You can view the current support levels in the Information Center topic Specified operating environments for Cell Broadband Engine solution.

If you download Linux distributions, ensure that you download the version compatible with the IBM PowerXCell 8i processor.

For general information about installing Linux, see the installation instructions that come with the distribution or are available at http://www.redhat.com/.

For additional instructions specific to your blade server, check for QS22 documentation on the IBM System Information Center at http://publib.boulder.ibm.com/infocenter/systems/ or the BladeCenter support Web site at http://www.ibm.com/support/us/en/.

If you need to install Linux on numerous blade servers, consider using DIM (Distributed Image Management for Linux Clusters). DIM is a sophisticated cluster management system especially for large and very large number of nodes. For more information on DIM see http://www.alphaworks.ibm.com/tech/dim/.

Note: IBM may add support for later versions of the operating systems or other operating systems. You can check the IBM support Web site or the Information Center topic Specified operating environments for Cell Broadband Engine solution to see the currently supported operating systems and levels.

Preparing a boot device

The QS22 blade server does not come with any onboard hard disks or other storage. Instead, you must allocate storage to the blade server as a resource. You can allocate:

- Networked storage
- SAS attached storage
- Modular flash drive

Using a boot device on the network

You cannot directly install Linux on a network device attached to the blade server. First you need to create an initial installation on a 64-bit POWER™ based system with local storage. You can then create multiple copies of the root file system on an NFS server. To be able to boot a particular blade server from a copy, adapt the instance specifics to the blade server and export the adapted copy for NFS mounting.

Figure 27 on page 56 illustrates the main steps for creating a network installation that the blade server can boot from.

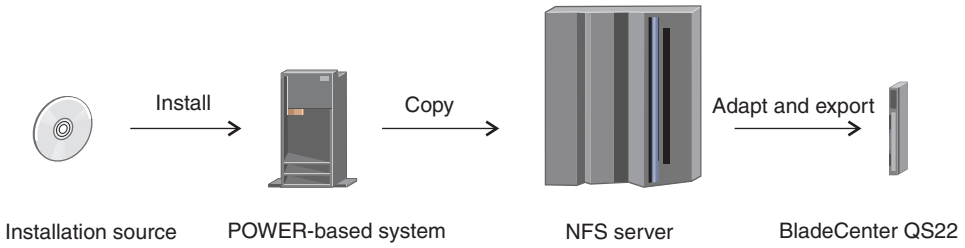

Figure 27. Installation overview for NLS boot device

For details check for QS22 documentation on the IBM support Web site at http://www.ibm.com/support/us/en/ and in the IBM Systems Information Center at http://publib.boulder.ibm.com/infocenter/systems/.

Note: Be aware that your blade server has two Ethernet ports and can be connected to two Ethernet switches. As the blade center performs a network boot from the controller that acquires the IP address, first make sure that your Linux configuration supports this. If your Linux environment requires a static IP address for a particular Ethernet port, you must set up your DHCP environment accordingly.

Configuring IBM Boot Disk System as a SAS boot device

If you have installed the optional SAS expansion card on the blade server and one or two IBM BladeCenter SAS Connectivity Modules on the BladeCenter unit, you can attach supported storage to it and configure the storage accordingly. See the documentation that comes with the SAS expansion card, the SAS connectivity module and the SAS storage system for further information.

The QS22 blade server supports the IBM BladeCenter Boot Disk System as SAS attached storage.

You must configure storage on your BladeCenter Boot Disk System before you can use it as a SAS boot device. For the configuration you use a management station that runs a Storage Manager. Use the Storage Manager for the operating system on your management station:

Linux IBM System Storage™ DS3000 Storage Manager

Windows Simplicity Storage Manager

For installation instructions, see the documentation that comes with your Storage Manager.

The descriptions in this section are based on the System Storage DS3000 Storage Manager. The Simplicity Storage Manager, might have a slightly different user interface.

Figure 28 on page 57 shows a schematic setup with a network connection between the workstation that runs the Storage Manager and the BladeCenter Boot Disk System.

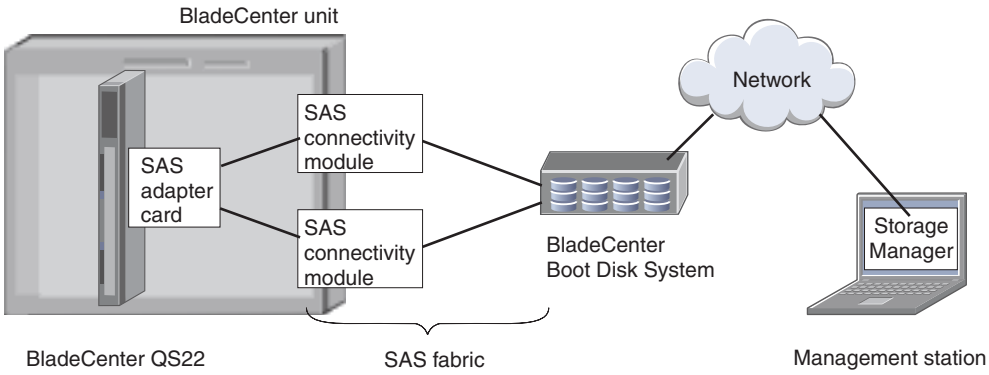

Figure 28. BladeCenter Boot Disk System setup for the QS22 blade server

The SAS expansion card is attached to the PCI-X connector of the blade server. Two SAS cables connect the SAS connectivity modules at the rear of the BladeCenter unit to the BladeCenter Boot Disk System.

Depending on the availability requirements of a particular installation, a SAS fabric might use different redundancy strategies. For example, there might be just a single SAS connectivity module or there might be duplicate SAS cables. Production environments, typically, have multiple storage systems and BladeCenter units.

For setup and configuration information see the BladeCenter Boot Disk System information on the BladeCenter support Web site at http://www.ibm.com/systems/bladecenter/support/. For a general introduction with setup examples see *IBM System Storage DS3000: Introduction and Implementation Guide*, SG24-7065, at http://www.redbooks.ibm.com/redbooks/pdfs/sg247065.pdf.

Complete the following steps to configure a boot device:

1. Start your Storage Manager. For details on steps 2 to 6 see the documentation that comes with the Storage Manager.
2. Make the BladeCenter Boot Disk System accessible to the Storage Manager by performing a discovery.
3. Assign a name to the BladeCenter Boot Disk System.
4. Make the storage system accessible to the blade server by configuring host access for the blade server.

   If two SAS connectivity modules are installed on the BladeCenter unit, the Storage Manager detects two ports for your blade server. If two ports are detected, be sure to add the SAS address for both ports.
5. Create a logical drive and map it to the blade server.
   - Note the logical drive name you assign when you map the new logical drive to the blade server. You need this name to find the SAS address of a boot device.
   - Note the logical unit number (LUN) you assign when you map the new logical drive to the blade server. You need this LUN when defining the logical drive as a boot device for the blade server.

   Each logical drive is automatically assigned to one of the controllers of the BladeCenter Boot Disk System. This controller becomes the preferred controller of the logical drive.
6. Find out the SAS address for the boot device.
   a. Click the **Summary** tab.

b. Click **Storage System Profile**.
c. In the Storage Systems Profile notebook, click the **Controllers** tab.
d. Find the preferred controller for your logical drive. Scroll to the `Associated Logical Drives` section of each controller. The name you assigned to the logical drive in step 5 on page 57 is listed as an associated logical drive for the preferred controller.
e. Within the section for the preferred controller, scroll down to the information for `Host interface Sas`. The SAS address for the boot device is specified as the `World-wide identifier` of the `Sas` host interface.

7. Configure the SAS drive as a boot device by performing the following steps from an SMS session with your blade server:
   a. Select **Change SAS Boot Device** on the SAS main menu.
   b. Select **Change SAS Boot Device Address** on the SAS Settings menu.
   c. Type the address of step 6e and press Enter. Omit any colons that were shown in the Storage Manager window to separate pairs of hexadecimal digits.
   d. Return to the SAS Settings menu.
   e. Select **Change SAS Boot Device LUN Id** on the SAS Settings menu.
   f. Type the LUN you assigned in step 5 on page 57 and press Enter.

You are now ready to install the operating system.

Note: A remote SAS storage must boot before the blade server attempts to boot the operating system from it.

Configuring the IBM BladeCenter S unit local drives as a SAS boot device

If you have installed your blade server in an IBM BladeCenter S unit, you can use local SAS drives of the BladeCenter S unit as a boot device.

For setup and configuration of local SAS drives see the documentation that comes with IBM BladeCenter S unit.

Complete the following steps from an SMS session with your blade server to configure a local SAS drive of a BladeCenter S unit as a boot device:

1. Select **Change SAS Boot Device** on the SAS main menu.
2. Select **Change SAS Boot Device Address** on the SAS Settings menu.
3. Type the SAS address of the disk you want to boot from and press Enter.

   Note: The disk may be either a physical disk or an LSI Integrated RAID volume created from physical disks.
4. Return to the SAS Settings menu.
5. Select **Change SAS Boot Device LUN Id** on the SAS Settings menu.
6. Type zero and press Enter.

Using the optional modular flash drive

You can install Linux directly to a modular flash drive installed in a QS22 blade server.

To install Linux on the modular flash drive, complete the following steps:

1. Allocate the media tray to the blade server where you want to make the installation.
2. Boot the Linux installation CD or DVD.
3. Follow the installation instructions that come with the distribution. The Linux installation automatically discovers the modular flash drive as an installation target.

Preparing the installation source

Note: This section applies to installations using SAS-attached storages or the modular flash drive. It does NOT apply to network-based installations described in "Using a boot device on the network" on page 55.

Before you install the operating system on the blade server, make sure that the blade server is turned on. You must first make an SOL or direct serial connection to the blade server before installing your operating system.

If you want to use SOL, configure and enable SOL on the blade server to establish an SOL connection, then open an SOL session. For instructions, see the *IBM BladeCenter Serial over LAN Setup Guide* and the *BladeCenter Management Module Command-Line Interface Reference Guide*. For information about SOL commands, see the documentation for your operating system.

You can install over the network, from the CD/DVD drive on the media tray, or from an ISO image.

Installing over the network

To install over the network, the installation packages must be copied to a server that the QS22 blade server can access through the network. You can also install from a CD/DVD drive connected to a server that the QS22 blade server can access through the network.

If you plan to install the operating system through the Ethernet network, see:

- "Integrating the Gigabit Ethernet controller into the BladeCenter" on page 50
- "Blade server Ethernet controller enumeration" on page 52
- The documentation that comes with the Ethernet switch module that you are using.

Note: A network boot uses DHCP, BOOTP, and TFTP protocols.

Installing from the media tray

The QS22 blade server does not come with a built-in CD/DVD drive. Instead, you must use the media tray on the BladeCenter unit.

To allocate the media tray to the blade server, press the media tray select button which is on the front panel of the blade server. Alternatively, you can use the Advanced Management Module to allocate the media tray to the blade server.

Installing from an ISO image

You can install an operating system from an ISO image of the installation media. Use the Advanced Management Module to mount the ISO image on your blade server. For details see *IBM BladeCenter Management Module User's Guide*.

Post installation configuration

After you install the operating system on the blade server, you must install any service packs or update packages that come with the operating system. For additional information, see http://www.ibm.com/support/us/en/, the instructions that come with your operating-system documentation and the service packs or update packages. Some options have device drivers that you must install. See the documentation that comes with the options for information about installing any required device drivers.

If your operating system does not have the required device drivers, contact your IBM marketing representative or authorized reseller, or see your operating system documentation for additional information.

If you want to use the Wake on LAN feature, ensure that it is active. You might have to activate it with ethtool.

Chapter 7. Solving problems

This chapter provides basic troubleshooting information to help you solve some common problems that might occur while setting up your blade server.

A problem with the BladeCenter QS22 can relate either to the BladeCenter QS22 or the BladeCenter unit.

A problem with the blade server exists if the BladeCenter unit contains more than one blade server and only one of the blade servers has the symptom. If all of the blade servers have the same symptom, then the problem relates to the BladeCenter unit. For more information, see the *Problem Determination and Service Guide* for your BladeCenter unit.

The BladeCenter QS22 blade server is supported in the IBM BladeCenter H unit, the IBM BladeCenter HT unit, and the IBM BladeCenter S (non RAID type only) unit.

You can put other blade server types that are supported in your BladeCenter unit in the same unit as a BladeCenter QS22.

Prerequisites

Before you start problem determination or servicing, check that:

- The BladeCenter QS22 is inserted correctly into the BladeCenter unit.
- All components are connected correctly
- The BladeCenter QS22 has the latest firmware updates. These should include updates for:
  - The BMC
  - The system firmware
  - Gb Ethernet controller
  - The SAS expansion card
  - The high-speed expansion card (if installed)
- The components in your SAS environment have the latest firmware updates. These include updates for:
  - SAS Connectivity Modules (if installed)
  - SAS Storage Modules (if installed into BladeCenter S chassis)
  - IBM Boot Disk System (if attached)

Basic checks

If you install the blade server in the BladeCenter unit and the blade server does not start, always perform the following basic checks before continuing with more advanced troubleshooting:

- Make sure that the BladeCenter unit is correctly connected to a power source.
- Reseat the blade server in the BladeCenter unit (see Chapter 3, “Installing the blade server,” on page 15).
- If the power on LED is flashing slowly, the blade server may be turned off. To turn on the blade server, see “Turning on the blade server” on page 9 for further information.

- If you have just added a new optional device or component, make sure that it is correctly installed and compatible with the blade server and its components. If the device or component is not compatible, remove it from the blade server, reinstall the blade server in the BladeCenter unit, and then restart the blade server.
- Use Advanced Management Module to check that the blade server appears in the list of blade servers available.

Troubleshooting charts

The following tables list problem symptoms and suggested solutions. If you cannot find the problem in the troubleshooting charts, or if carrying out the suggested steps do not solve the problem, have the blade server serviced.

If you have problems with an adapter, monitor, keyboard, mouse, or power module, see the *Problem Determination and Service Guide* for your BladeCenter unit for more information.

If you have problems with an Ethernet switch module, I/O adapter, or other optional device that can be installed in the BladeCenter unit, see the *Problem Determination and Service Guide* or other documentation that comes with the device for more information.

Problems indicated by the front panel LEDs

The state of the LEDs on the front of the blade can help in isolating problems.

The table below gives an explanation and a suggested action, if required, for each

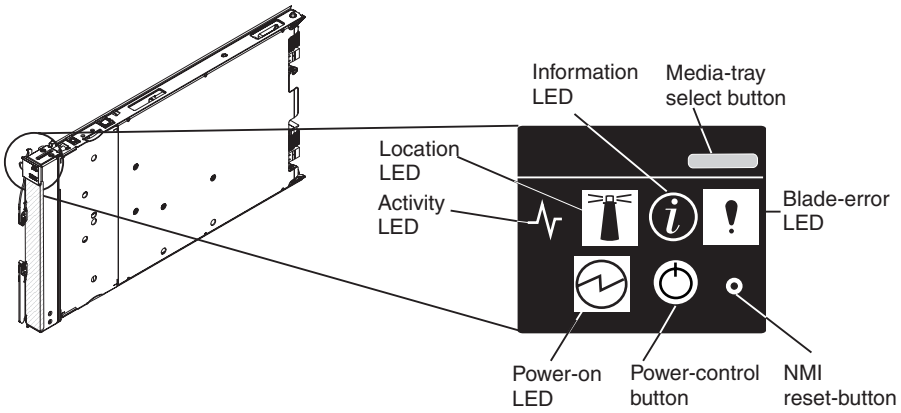

Figure 29. Power-control button and LEDs

LED.

Table 2. Explanation of LEDs and their states

LED	State	Explanation	Suggested action
Blade error LED	yellow	A system error has occurred on the blade server.	Check the BladeCenter error log, see *QS22 Problem Determination and Service Guide*.

Table 2. Explanation of LEDs and their states (continued)

LED	State	Explanation	Suggested action
Information LED	yellow	Information about a system event has been placed in the Advanced Management Module Event Log. The information LED remains on until turned off by Advanced Management Module or through IBM Director Console.	Check Advanced Management Module to see what the problem is. See the *BladeCenter Management Module User's Guide* for further information about the error.
Activity LED	Green	There is network activity.	No action required. For further information about troubleshooting networks, see "Network connection problems" on page 64.
Power-on LED	Flashing rapidly	The service processor on the blade server is communicating with the BladeCenter Management Module.	No action required
	Flashing slowly	The blade server has power but is not turned on.	Turn on if required
	Lit continuously (steady)	The blade server has power and is turned on.	No action required
	Not lit.	Blade server not powered.	1. Verify that the BladeCenter unit provides 12V dc to the blade server. 2. Reseat blade server. 3. Check if BladeCenter power supplies numbers 3 and 4 are installed and powered. If they are not, install and power them or use slots 1-5. 4. Go to "Power problems" on page 64

Power problems

Power symptom	Suggested action
The blade server does not turn on.	1. Make sure that: a. The power-on LED on the front of the BladeCenter unit is lit. b. The LEDs on all the BladeCenter power modules are lit. c. The power-on LED on the blade-server control panel is flashing slowly. • The power-on LED only flashes rapidly while it is communicating with the management module. If the power-on LED is flashing rapidly and continues to do so for an unduly long time, the blade server is not communicating with the management module. Power off, reseat the blade server and reboot. • If the power LED is off, either the blade bay is not receiving power, the blade server is defective, the Advanced Management Module firmware is an earlier version and does not support this function, or the LED information panel is loose or defective. d. Local power control for the blade server is enabled. Check using the Advanced Management Module Web interface. The blade server might have been instructed through the Advanced Management Module to turn on. 2. If you have just installed a new option in the blade server, remove it, and restart the blade server. If the blade server now powers on, troubleshoot the option. See the documentation that comes with the option for further information. 3. Try another blade server in the blade bay. If it works, you may need to have a trained service technician replace the system blade assembly.

Power throttling

Be aware that the BladeCenter unit automatically reduces the BladeCenter QS22 processor speed if certain conditions are met. One such condition is temperature thresholds being exceeded, for example, when the blade server is running in acoustic mode. This throttling occurs independent of your power configuration. Full processor speed is restored automatically when the conditions that have caused the throttling have been resolved.

Network connection problems

Network connection symptom	Suggested action
One or more blade servers are unable to communicate with the network.	Make sure that: • The switch modules for the network interface being used are installed in the correct BladeCenter bays and are configured and operating correctly. • The settings in the switch module are correct for the blade server (settings in the switch module are blade server specific). For additional information, see: • Chapter 5, “Configuring the blade server,” on page 39 • The *Problem Determination and Service Guide* for your BladeCenter unit • Other product-specific documentation that comes with the switch module **Note:** For the latest editions of the IBM BladeCenter documentation, go to http://www.ibm.com/support/us/en/. If the problem remains, see *QS22 Problem Determination and Service Guide*. If all the blades cannot communicate with the network, check the network itself for problems.

Service processor problems

Service processor symptom	Suggested action
Service processor reports a general monitor failure.	1. If the blade server is operating, shut down the operating system. 2. If the blade server was not turned off, press the power-control button (behind the blade server control-panel door) to turn off the server. 3. Remove the blade server from the BladeCenter unit. 4. Wait 30 seconds and reinstall the blade server into the BladeCenter unit. 5. Restart the blade server. If the problem remains, see *QS22 Problem Determination and Service Guide*

Recovering the system firmware code

The system firmware is contained in two separate images in the flash memory of the blade server: temporary and permanent. These images are referred to as TEMP and PERM, respectively. The system normally starts from the TEMP image, and the PERM image serves as a backup. If the TEMP image becomes damaged, such as from a power failure during a firmware update, the system automatically starts from the PERM image.

If the TEMP image is damaged, you can recover the TEMP image from the PERM image. See “Recovering the TEMP image from the PERM image” for further information.

Checking the boot image

To check whether the system has started from the PERM image, enter:

```
cat /proc/device-tree/openprom/ibm,fw-bank
```

A `P` is returned if the system has started from the PERM image.

Booting from the TEMP image

To initiate a boot from the TEMP image after the system has booted from the PERM side, complete the following steps:

1. Turn off the blade server.
2. Restart the blade system management processor from the Advanced Management Module.
3. Turn on the blade server.

Note: If the temp side is corrupted the boot times out, and an automatic reboot occurs after switching to the PERM side.

If the blade server does not restart, you must replace the system board assembly. Contact a service support representative for assistance.

Recovering the TEMP image from the PERM image

To recover the TEMP image from the PERM image, you must copy the PERM image into the TEMP image. To perform the copy, complete the following steps:

1. Copy the perm image to the temp image. Using the Linux operating system, type the following command:

   ```
   update_flash -r
   ```

2. Shut down the blade server using the operating system.
3. Restart the blade system management processor from the management module.
4. Turn on the blade server.

You might need to update the firmware code to the latest version. See “Installing the system firmware” on page 47 for more information on updating the firmware code.

System firmware startup messages

The system firmware displays the progress of the startup process on the serial console from the time that ac power is connected to the system until the operating system login prompt is displayed following a successful operating system startup.

If a serial console is not connected, you can use the Advanced Management Module to monitor the logs and display informational and error messages.

If the firmware encounters an error during the startup process, a message describing the error together with an error code is displayed on the serial console.

There are two types of error, where xxx represents the number of the error code:

Cxxx This is an internal checkpoint. If the system stops during the startup process a checkpoint may be displayed.

Exxx This type of error means that there is a failure that does not allow the firmware to continue the startup process. Check the error codes in the*QS22 Problem Determination and Service Guide*. If these do not help resolve the problem, contact a service support representative.

There are cases where a message that is informational only is displayed on the serial console.

Wxxx This is a warning message. The firmware allows the startup process to continue, but indicates there maybe a problem. A warning message can be combined with an error message to give more complete information about an error.

Descriptions for each of the error codes are not included in this document. See the *Problem Determination and Service Guide* for your blade server for further information.

Checkpoints

Checkpoints show the progress of the boot. Each checkpoint is overwritten by the next as the boot process continues. If the boot process stops for any reason, a checkpoint may be displayed. Take note of the checkpoint code and any message, then attempt to reboot the blade server.

If the problem persists, contact your IBM service representative with details of the checkpoint and any message associated with it.

Appendix A. Using the SMS utility

Use the System Management Services (SMS) utility to perform a variety of configuration tasks on the BladeCenter QS22 blade server.

Starting the SMS utility

Start the SMS utility to configure the blade server.

1. Establish an SOL session with the blade server. See the *BladeCenter Management Module Command-Line Interface Reference Guide* or the *BladeCenter Serial-Over-LAN Setup Guide* for more information.
2. Turn on or restart the blade server.
3. When the boot process starts, you see a screen similar to the following:

```
QS22 Firmware Starting
 Check ROM  = OK
 Build Date = Jan 4 2008 11:31:29
 FW Version = "QD-1.26.0-0"

Press "F1" to enter Boot Configuration (SMS)
Press "F2" to boot once from CD/DVD

DDR2 MEMORY INITIALIZATION
 CPU0 DIMMs:  DIMM1=4096MB  DIMM2=4096MB  DIMM3=4096MB  DIMM4=4096MB
 CPU0 timings: 800 MHz, CL=6, tRCD=6, tRP=6
```

   Press **F1** to enter the SMS menu.

The SMS utility menu

Select SMS tasks from the SMS utility main menu. Choices on the SMS utility main menu depend on the version of the firmware in the blade server. Some menu choices might differ slightly from these descriptions.

```
 PowerPC Firmware
 Version QD0123000
 SLOF-SMS 1.1 (c) Copyright IBM Corp. 2007 All rights reserved.
-------------------------------------------------------------------------------
 Main Menu
  1. Select Language
  2. Setup Remote IPL (Initial Program Load)
  3. Change SCSI Settings
  4. Select Console
  5. Select Boot Options
  6. Firmware Boot Side Options
  7. Progress Indicator History
  8. FRU Information
  9. Change SAS Boot Device
```

Change SCSI Settings
: Select this choice to view and change the addresses of the SCSI controllers that are attached to the blade server.

Select Console
: Select this choice to select the console on which the SMS menus are displayed.

Select Boot Options

Select this choice to view and set various options regarding the installation devices and boot devices.

If a device that you are trying to select (such as a USB CD drive in the BladeCenter media tray) is not displayed in the Select Device Type menu, select List all Devices and select the device from that menu.

Select Language

Select this choice to change the language that is used to display the SMS menus. A screen similar to the following appears:

```
PowerPC Firmware
 Version QD0123000
 SLOF-SMS 1.1 (c) Copyright IBM Corp. 2007 All rights reserved.
-------------------------------------------------------------------------------
 Select Language
   1. ISO8859-1  English (United States) *


-------------------------------------------------------------------------------
 Navigation Keys:
 M = return to Main Menu                  N = Next page of list
 ESC key = return to previous screen      X = eXit System Management Services
-------------------------------------------------------------------------------
 Type menu item number and press Enter or select Navigation key :
```

At present, English (United States) is the only available language.

Setup Remote IPL (Initial Program Load)

Select this to configure a network adapter for networks that use static IP addresses or TFTP only. By default the QS22 uses DHCP, in which case no changes should be made.

The screen is a similar to:

```
 PowerPC Firmware
 Version QD0123000
 SLOF-SMS 1.1 (c) Copyright IBM Corp. 2007 All rights reserved.
-------------------------------------------------------------------------------
 NIC Adapters (NET)
  1. /axon@10000000000/plb5/plb4/pcix@4000004600000000/ethernet@1
  2. /axon@10000000000/plb5/plb4/pcix@4000004600000000/ethernet@1,1









-------------------------------------------------------------------------------
 Navigation Keys:
 M = return to Main Menu
 ESC key = return to previous screen      X = eXit System Management Services
-------------------------------------------------------------------------------
 Type menu item number and press Enter or select Navigation key :
```

To view the Network Parameters screen type the number of the adapter you wish to configure and press **Enter**. A screen similar to the following appears:

```
 PowerPC Firmware
 Version QD0123000
 SLOF-SMS 1.1 (c) Copyright IBM Corp. 2007 All rights reserved.
-------------------------------------------------------------------------------
 Network Parameters
 NET /axon@10000000000/plb5/plb4/pcix@4000004600000000/ethernet@1
  1. IP Parameters
  2. Adapter Configuration
  3. Ping Test
  4. Advanced Setup: DHCP









-------------------------------------------------------------------------------
 Navigation Keys:
 M = return to Main Menu
 ESC key = return to previous screen      X = eXit System Management Services
-------------------------------------------------------------------------------
 Type menu item number and press Enter or select Navigation key :
```

Type the number of the menu item and press **Enter**.

IP Parameters

This allows you to configure IP for the network adapter to use static IP addresses or TFTP. You should not change these setting if you use DHCP, which is the default.

```
PowerPC Firmware
Version QD0123000
SLOF-SMS 1.1 (c) Copyright IBM Corp. 2007 All rights reserved.
--------------------------------------------------------------------------------
IP Parameters
NET /axon@10000000000/plb5/plb4/pcix@4000004600000000/ethernet@1
 1. Client IP Address                [000.000.000.000]
 2. Server IP Address                [000.000.000.000]
 3. Gateway IP Address               [000.000.000.000]
 4. Subnet Mask                      [255.255.255.000]









--------------------------------------------------------------------------------
Navigation Keys:
M = return to Main Menu
ESC key = return to previous screen      X = eXit System Management Services
--------------------------------------------------------------------------------
Type menu item number and press Enter or select Navigation key :
```

Select an item from the list and enter the appropriate address and subnet mask. Press **Enter** when you have finished each item. To save the information and return to the Main Menu, press **M**. If you wish to cancel and return to the main menu, press **Esc**.

Adapter Configuration

This allows you to set network parameters for the adapter.

```
PowerPC Firmware
Version QD0123000
SLOF-SMS 1.1 (c) Copyright IBM Corp. 2007 All rights reserved.
--------------------------------------------------------------------------------
Adapter Configuration
NET /axon@10000000000/plb5/plb4/pcix@4000004600000000/ethernet@1
 1. Speed, Duplex
 2. Spanning Tree Enabled
 3. Protocol









--------------------------------------------------------------------------------
Navigation Keys:
M = return to Main Menu
ESC key = return to previous screen      X = eXit System Management Services
--------------------------------------------------------------------------------
Type menu item number and press Enter or select Navigation key :
```

Do not change these settings unless required by your network. The defaults are:

- Speed: detected automatically
- Spanning Tree Enabled: disabled

  Only change this if your network uses the Spanning-Tree Protocol link management protocol.
- Protocol: standard.

  IEE 802.3 is the only other option.

Ping Test

This enables you to verify the static IP addresses you have set.

```
PowerPC Firmware
 Version QD0123000
 SLOF-SMS 1.1 (c) Copyright IBM Corp. 2007 All rights reserved.
--------------------------------------------------------------------------------
 Ping Test
 NET /axon@10000000000/plb5/plb4/pcix@4000004600000000/ethernet@1
 Speed, Duplex:  auto, auto
 Client IP Address                [000.000.000.000]
 Server IP Address                [000.000.000.000]
 Gateway IP Address               [000.000.000.000]
 Subnet Mask                      [255.255.255.000]
 Protocol: Standard
 Spanning Tree Enabled: No
 Connector Type:


  1. Execute Ping Test
--------------------------------------------------------------------------------
 Navigation Keys:
 M = return to Main Menu
 ESC key = return to previous screen      X = eXit System Management Services
--------------------------------------------------------------------------------
 Type menu item number and press Enter or select Navigation key :
```

Type **1** to ping each IP address in turn.

Advanced Setup: DHCP

You do not need to use this option unless your network requires a specific block size or filename.

```
 PowerPC Firmware
 Version QD0123000
 SLOF-SMS 1.1 (c) Copyright IBM Corp. 2007 All rights reserved.
--------------------------------------------------------------------------------
 Advanced Setup: DHCP
 NET /axon@10000000000/plb5/plb4/pcix@4000004600000000/ethernet@1
  1. DHCP Retries: 255
  2. TFTP Blocksize: 512
  3. TFTP  Retries: 5
  4. TFTP Filename:









--------------------------------------------------------------------------------
 Navigation Keys:
 M = return to Main Menu
 ESC key = return to previous screen      X = eXit System Management Services
--------------------------------------------------------------------------------
 Type menu item number and press Enter or select Navigation key :
```

Change SCSI Settings

At present the QS22 does not support SCSI so this option is not available.

Select Console

You do not have to use this option as, by default, the current session is the active session, and QS22 does not support more than one session.

```
 PowerPC Firmware
 Version QD0123000
 SLOF-SMS 1.1 (c) Copyright IBM Corp. 2007 All rights reserved.
-------------------------------------------------------------------------------
 Select Console
 To select this console as the active console press 0









-------------------------------------------------------------------------------
 Navigation Keys:
 M = return to Main Menu
 ESC key = return to previous screen      X = eXit System Management Services
-------------------------------------------------------------------------------
 Type menu item number and press Enter or select Navigation key :
```

Select Boot Options

Use this screen to select the device from which to install the operating system, the boot device and the boot device order. If you wish to install or boot from the BladeCenter unit media tray, you must first allocate it to the blade server using the Advanced Management Module.

```
PowerPC Firmware
 Version QD0123000
 SLOF-SMS 1.1 (c) Copyright IBM Corp. 2007 All rights reserved.
-------------------------------------------------------------------------------
 Multiboot
  1. Select Install/Boot Device
  2. Configure Boot Device Order









-------------------------------------------------------------------------------
 Navigation Keys:
 M = return to Main Menu
 ESC key = return to previous screen      X = eXit System Management Services
-------------------------------------------------------------------------------
 Type menu item number and press Enter or select Navigation key :
```

Select Install/Boot Device

To select the installation or boot device, type **1** and press **Enter**. The screen that appears is similar to the following:

```
 PowerPC Firmware
 Version QD0123000
 SLOF-SMS 1.1 (c) Copyright IBM Corp. 2007 All rights reserved.
-------------------------------------------------------------------------------
 Select Device
 Number     Device Name
 .          NET /axon@10000000000/plb5/plb4/pcix@4000004600000000/ethernet@1
 .          CDROM .../plb5/plb4/pcix@4000004600000000/usb@1/hub@1/hub@2/cdrom@3









-------------------------------------------------------------------------------
 Navigation Keys:
 M = return to Main Menu
 ESC key = return to previous screen      X = eXit System Management Services
-------------------------------------------------------------------------------
 Type menu item number and press Enter or select Navigation key :
```

Only available boot devices are displayed. If you wish to boot from the CD/DVD drive in the media tray, first allocated it to the blade server using the Advanced Management Module, as otherwise, it is not shown as an available option.

Configure Boot Device Order

When booting the operating system, the blade server cycles through the boot devices in list order until it finds a boot device. If it does not, an error is generated and placed in the Advanced Management Module. You may only list boot devices if they are allocated or available to the blade server. For example, to include the CD/DVD drive in the BladeCenter media tray in the list, first been allocate it to the blade server using Advanced Management Module. To select boot device order, type **2** and press **Enter**. A screen similar to the following appears:

```
PowerPC Firmware
 Version QD0123000
 SLOF-SMS 1.1 (c) Copyright IBM Corp. 2007 All rights reserved.
-------------------------------------------------------------------------------
 Configure Boot Device Order
  1. Select 1st Boot Device
  2. Select 2nd Boot Device
  3. Select 3rd Boot Device
  4. Select 4th Boot Device
  5. Display Current Setting
  6. Restore Default Setting









-------------------------------------------------------------------------------
 Navigation Keys:
 M = return to Main Menu
 ESC key = return to previous screen      X = eXit System Management Services
-------------------------------------------------------------------------------
 Type menu item number and press Enter or select Navigation key :
```

To set the boot device order, type the menu number according to the order you want for a particular device. For example, to choose the first boot device, type **1** and press **Enter**. A screen showing all the available boot devices appears:

```
PowerPC Firmware
Version QD0123000
SLOF-SMS 1.1 (c) Copyright IBM Corp. 2007 All rights reserved.
--------------------------------------------------------------------------------
Select Device
Number     Position     Device Name
 1.                     Not Specified
 2.        1            NET /axon@10000000000/plb5/plb4/pcix@4000004600000000/ethernet1




--------------------------------------------------------------------------------
Navigation Keys:
M = return to Main Menu
ESC key = return to previous screen      X = eXit System Management Services
--------------------------------------------------------------------------------
Type menu item number and press Enter or select Navigation key :
```

The screen shows the current position in the list for the displayed boot devices. To alter the position, choose a device, type the number and press **Enter**. To save your selection, press **M** to return to the menu.

Firmware Boot Side Options

Normally the BladeCenter QS22 boots from the Temporary side and you should not change this. However, there may be occasions, for example boot failure, where you must change the setting.

```
PowerPC Firmware
Version QD0123000
SLOF-SMS 1.1 (c) Copyright IBM Corp. 2007 All rights reserved.
--------------------------------------------------------------------------------
Firmware Boot Side Options Menu

Firmware Boot Side for next boot: Temporary

 1. Permanent
 2. Temporary







--------------------------------------------------------------------------------
Navigation Keys:
M = return to Main Menu
ESC key = return to previous screen      X = eXit System Management Services
--------------------------------------------------------------------------------
Type menu item number and press Enter or select Navigation key :
```

Progress Indicator History

This shows the messages from the present and previous attempts to boot the blade. It also shows messages from the last occasion the blade could not boot from the Temporary side, if any.

```
 PowerPC Firmware
 Version QD0123000
 SLOF-SMS 1.1 (c) Copyright IBM Corp. 2007 All rights reserved.
-------------------------------------------------------------------------------
 View Progress Indicator History
  1.  Current Boot Progress Indicator
  2.  Previous Boot Progress Indicator
  3.  Previous Failover Permanent Side Boot









-------------------------------------------------------------------------------
 Navigation Keys:
 M = return to Main Menu
 ESC key = return to previous screen      X = eXit System Management Services
-------------------------------------------------------------------------------
 Type menu item number and press Enter or select Navigation key :
```

The screen below shows an example of a successful previous boot:

```
PowerPC Firmware
 Version QD0123000
 SLOF-SMS 1.1 (c) Copyright IBM Corp. 2007 All rights reserved.
-------------------------------------------------------------------------------
 Progress Indicator History

Creating common NVRAM partition
                              C0880
Could not find SAS partition in NVRAM - created.
 Adapters on 000001460ec00000
                     00 0800 (D) : 14e4 16a8    network [ ethernet ]
                     00 0900 (D) : 14e4 16a8    network [ ethernet ]
 Adapters on 000001a040000000
                     00 0000 (B) : 1014 032c    pci
 Adapters on 000001a240000000
                     00 0000 (B) : 1014 032c    pci

-------------------------------------------------------------------------------
 Navigation Keys:
 M = return to Main Menu                  N = Next page of list
 ESC key = return to previous screen      X = eXit System Management Services
-------------------------------------------------------------------------------
 Type menu item number and press Enter or select Navigation key :
```

Press **N** to scroll through the boot history. When you have finished, press **Esc** to return to the menu.

FRU information

The VPD on each blade server contains details about the machine type or model, serial number and the universal unique ID.

The screen is similar to the following:

```
PowerPC Firmware
 Version QD0123000
 SLOF-SMS 1.1 (c) Copyright IBM Corp. 2007 All rights reserved.
-------------------------------------------------------------------------------
 FRU Information

  Machine Type and Model: 079338x

  Machine Serial Number: ABCDEFG

  Universal Unique ID: 12345678-1234-1234-1234-123456789ABC





-------------------------------------------------------------------------------
 Navigation Keys:
 M = return to Main Menu
 ESC key = return to previous screen      X = eXit System Management Services
-------------------------------------------------------------------------------
 Select Navigation key :
```

Adding FRU information

When you replace a FRU details are not recorded in the VPD. You must enter them manually through SMS.

When the system firmware detects an FRU replacement part during boot the process stops to allow you to enter the machine type or model and serial number. Boot does not continue until the information is provided.

To enter new FRU information, complete the following steps:

1. Using a Telnet or SSH client, connect to the Advanced Management Module external Ethernet interface IP address.
2. When prompted, enter a valid user ID and password. The default management module user ID is USERID, and the default password is PASSW0RD, where the 0 is a zero.

   Note: The userid and password may have been changed. If so, check with the system administrator for a valid user id and password.
3. Power cycle the blade and start an SOL console by using the `power -cycle -c` command. See “Using the SMS utility program” on page 41 for further information.
4. The following screen appears:

```
PowerPC Firmware
 Version QD0123000
 SLOF-SMS 1.1 (c) Copyright IBM Corp. 2007 All rights reserved.
--------------------------------------------------------------------------------


      Enter Type Model Number
      (Must be 7 characters, only A-Z, a-z, 0-9 allowed. Press Esc to skip)









 Enter Type Model Number :
```

Type the model number according to the instructions on the screen and press **Enter** to continue.

5. You must confirm the model number:

```
PowerPC Firmware
 Version QD0123000
 SLOF-SMS 1.1 (c) Copyright IBM Corp. 2007 All rights reserved.
--------------------------------------------------------------------------------


            Number entered is: 1234567
            Accept number?
            (Enter 'y' or 'Y' to accept or 'n' or 'N' to decline)









 Select Navigation key :
```

Type **y** or **Y** and press **Enter** to confirm the number.

6. At the following screen, type the serial number:

```
PowerPC Firmware
 Version QD0123000
 SLOF-SMS 1.1 (c) Copyright IBM Corp. 2007 All rights reserved.
--------------------------------------------------------------------------------


               Enter Serial Number
               (Must be 7 characters, only A-Z, a-z, 0-9 allowed)









 Enter Serial Number :
--------------------------------------------------------------------------------
```

Press **Enter** to continue.

7. You must now confirm the serial number:

```
PowerPC Firmware
 Version QD0123000
 SLOF-SMS 1.1 (c) Copyright IBM Corp. 2007 All rights reserved.
--------------------------------------------------------------------------------


            Number entered is: ABCDEFG
            Accept number?
            (Enter 'y' or 'Y' to accept or 'n' or 'N' to decline)









 Select Navigation key :
--------------------------------------------------------------------------------
```

Type **y** or **Y** and press **Enter** to confirm the number.

SAS Settings

Use this option to configure or change the SAS settings if you have installed the IBM BladeCenter Boot Disk System or you installed the blade server into an IBM BladeCenter S unit.

Note: You must use this option when configuring an IBM BladeCenter Boot Disk System or local SAS drives in an IBM BladeCenter S unit for the first time.

```
 PowerPC Firmware
 Version QD0123000
 SLOF-SMS 1.1 (c) Copyright IBM Corp. 2007 All rights reserved.
-------------------------------------------------------------------------------
 SAS Settings
  1.  Change SAS Boot Device Address
  2.  Change SAS Boot Device LUN Id









-------------------------------------------------------------------------------
 Navigation Keys:
 M = return to Main Menu
 ESC key = return to previous screen      X = eXit System Management Services
-------------------------------------------------------------------------------
 Type menu item number and press Enter or select Navigation key :
```

Choose **1** to set or change the SAS Boot Device Address. A screen similar to the following appears:

```
 PowerPC Firmware
 Version QD0123000
 SLOF-SMS 1.1 (c) Copyright IBM Corp. 2007 All rights reserved.
-------------------------------------------------------------------------------
 Change SAS Boot Device Address

 Current SAS Disk Address (Default = 0) : 0









-------------------------------------------------------------------------------
 Navigation Keys:
 M = return to Main Menu
 ESC key = return to previous screen      X = eXit System Management Services
-------------------------------------------------------------------------------
 Type SAS Address in hexadecimal and press Enter or select navigation key:
```

When configuring IBM BladeCenter Boot Disk System as a boot device, the SAS address can be obtained from the Storage System Profile utility. See the documentation that comes with your IBM BladeCenter Boot Disk System for more information about the Storage System Profile utility.

When configuring an IBM BladeCenter S local SAS drive as a boot device, the SAS address can obtained from the blade host firmware output.

Once you have typed the address, press **Enter** to add the address, then **M** to return to the SAS Settings menu.

Choose **2** to set or change the SAS Boot Device LUN ID. A screen similar to the following appears:

```
PowerPC Firmware
 Version QD0123000
 SLOF-SMS 1.1 (c) Copyright IBM Corp. 2007 All rights reserved.
-------------------------------------------------------------------------------
 Change SAS Boot Device LUN Id

 Current SAS LUN Id (Default = 0) : 0









-------------------------------------------------------------------------------
 Navigation Keys:
 M = return to Main Menu
 ESC key = return to previous screen      X = eXit System Management Services
-------------------------------------------------------------------------------
 Type new LUN Id in hexadecimal and press Enter or select navigation key:
```

When configuring IBM BladeCenter Boot Disk System as a boot device, the LUN Id can be obtained from the Storage System Profile utility. See the documentation that comes with your IBM BladeCenter Boot Disk System for more information about the Storage System Profile utility.

When configuring an IBM BladeCenter S local SAS drive as a boot device, use `0` as the LUN Id.

Appendix B. Getting help and technical assistance

If you need help, service, or technical assistance or just want more information about IBM products, you will find a wide variety of sources available from IBM to assist you. This appendix contains information about where to go for additional information about IBM and IBM products, what to do if you experience a problem with your BladeCenter product or optional device, and whom to call for service, if it is necessary.

Before you call

Before you call, make sure that you have taken these steps to try to solve the problem yourself:

- Check all cables to make sure that they are connected.
- Check the power switches to make sure that the system and any optional devices are turned on.
- Use the troubleshooting information in your system documentation, and use the diagnostic tools that come with your system. Information about diagnostic tools is in the *Hardware Maintenance Manual and Troubleshooting Guide* or *Problem Determination and Service Guide* on the IBM *Documentation* CD that comes with your system.
- Go to http://www.ibm.com/systems/bladecenter/support/ to check for information to help you solve the problem.

You can solve many problems without outside assistance by following the troubleshooting procedures that IBM provides in the online help or in the documentation that is provided with your IBM product. The documentation that comes with BladeCenter systems also describes the diagnostic tests that you can perform. Most BladeCenter systems, operating systems, and programs come with documentation that contains troubleshooting procedures and explanations of error messages and error codes. If you suspect a software problem, see the documentation for the software.

Using the documentation

Information about your IBM BladeCenter system and preinstalled software, if any, or optional device is available in the documentation that comes with the product. That documentation can include printed documents, online documents, readme files, and help files. See the troubleshooting information in your system documentation for instructions for using the diagnostic programs. The troubleshooting information or the diagnostic programs might tell you that you need additional or updated device drivers or other software. IBM maintains pages on the World Wide Web where you can get the latest technical information and download device drivers and updates. To access these pages, go to http://www.ibm.com/systems/bladecenter/support/ and follow the instructions. Also, some documents are available through the IBM Publications Center at http://www.ibm.com/shop/publications/order/.

Getting help and information from the World Wide Web

On the World Wide Web, the IBM Web site has up-to-date information about IBM systems, optional devices, services, and support. The address for IBM BladeCenter information is http://www.ibm.com/systems/bladecenter/.

You can find service information for IBM systems and optional devices at http://www.ibm.com/systems/support/.

Software service and support

Through IBM Support Line, you can get telephone assistance, for a fee, with usage, configuration, and software problems with BladeCenter products. For information about which products are supported by Support Line in your country or region, see http://www.ibm.com/services/sl/products/.

For more information about Support Line and other IBM services, see http://www.ibm.com/services/us/, or see http://www.ibm.com/planetwide/ for support telephone numbers. In the U.S. and Canada, call 1-800-IBM-SERV (1-800-426-7378).

Hardware service and support

You can receive hardware service through IBM Services or through your IBM reseller, if your reseller is authorized by IBM to provide warranty service. See http://www.ibm.com/planetwide/ for support telephone numbers, or in the U.S. and Canada, call 1-800-IBM-SERV (1-800-426-7378).

In the U.S. and Canada, hardware service and support is available 24 hours a day, 7 days a week. In the U.K., these services are available Monday through Friday, from 9 a.m. to 6 p.m.

Appendix C. Notices

This information was developed for products and services offered in the U.S.A.

IBM may not offer the products, services, or features discussed in this document in other countries. Consult your local IBM representative for information on the products and services currently available in your area. Any reference to an IBM product, program, or service is not intended to state or imply that only that IBM product, program, or service may be used. Any functionally equivalent product, program, or service that does not infringe any IBM intellectual property right may be used instead. However, it is the user's responsibility to evaluate and verify the operation of any non-IBM product, program, or service.

IBM may have patents or pending patent applications covering subject matter described in this document. The furnishing of this document does not give you any license to these patents. You can send license inquiries, in writing, to:

IBM Director of Licensing
IBM Corporation
North Castle Drive
Armonk, NY 10504-1785
U.S.A.

INTERNATIONAL BUSINESS MACHINES CORPORATION PROVIDES THIS PUBLICATION "AS IS" WITHOUT WARRANTY OF ANY KIND, EITHER EXPRESS OR IMPLIED, INCLUDING, BUT NOT LIMITED TO, THE IMPLIED WARRANTIES OF NON-INFRINGEMENT, MERCHANTABILITY OR FITNESS FOR A PARTICULAR PURPOSE. Some states do not allow disclaimer of express or implied warranties in certain transactions, therefore, this statement may not apply to you.

This information could include technical inaccuracies or typographical errors. Changes are periodically made to the information herein; these changes will be incorporated in new editions of the publication. IBM may make improvements and/or changes in the product(s) and/or the program(s) described in this publication at any time without notice.

Any references in this information to non-IBM Web sites are provided for convenience only and do not in any manner serve as an endorsement of those Web sites. The materials at those Web sites are not part of the materials for this IBM product, and use of those Web sites is at your own risk.

IBM may use or distribute any of the information you supply in any way it believes appropriate without incurring any obligation to you.

Trademarks

IBM, the IBM logo, and ibm.com are trademarks or registered trademarks of International Business Machines Corporation in the United States, other countries, or both. If these and other IBM trademarked terms are marked on their first occurrence in this information with a trademark symbol (® or ™), these symbols indicate U.S. registered or common law trademarks owned by IBM at the time this information was published. Such trademarks may also be registered or common law trademarks in other countries. A current list of IBM trademarks is available on the Web at "Copyright and trademark information" at http://www.ibm.com/legal/copytrade.shtml.

Adobe and PostScript are either registered trademarks or trademarks of Adobe Systems Incorporated in the United States and/or other countries.

Cell Broadband Engine is a trademark of Sony Computer Entertainment, Inc., in the United States, other countries, or both and is used under license therefrom.

Linux is a registered trademark of Linus Torvalds in the United States, other countries, or both.

Microsoft and Windows are trademarks of Microsoft Corporation in the United States, other countries, or both.

Other company, product, or service names may be trademarks or service marks of others.

Important notes

Processor speed indicates the internal clock speed of the microprocessor; other factors also affect application performance.

CD or DVD drive speed is the variable read rate. Actual speeds vary and are often less than the possible maximum.

When referring to processor storage, real and virtual storage, or channel volume, KB stands for 1024 bytes, MB stands for 1 048 576 bytes, and GB stands for 1 073 741 824 bytes.

When referring to hard disk drive capacity or communications volume, MB stands for 1 000 000 bytes, and GB stands for 1 000 000 000 bytes. Total user-accessible capacity can vary depending on operating environments.

Maximum internal hard disk drive capacities assume the replacement of any standard hard disk drives and population of all hard disk drive bays with the largest currently supported drives that are available from IBM.

Maximum memory might require replacement of the standard memory with an optional memory module.

IBM makes no representation or warranties regarding non-IBM products and services that are ServerProven®, including but not limited to the implied warranties of merchantability and fitness for a particular purpose. These products are offered and warranted solely by third parties.

IBM makes no representations or warranties with respect to non-IBM products. Support (if any) for the non-IBM products is provided by the third party, not IBM.

Some software might differ from its retail version (if available) and might not include user manuals or all program functionality.

Product recycling and disposal

This unit must be recycled or discarded according to applicable local and national regulations. IBM encourages owners of information technology (IT) equipment to responsibly recycle their equipment when it is no longer needed. IBM offers a variety of product return programs and services in several countries to assist equipment owners in recycling their IT products. Information on IBM product recycling offerings can be found on IBM's Internet site at http://www.ibm.com/ibm/environment/products/index.shtml.

Esta unidad debe reciclarse o desecharse de acuerdo con lo establecido en la normativa nacional o local aplicable. IBM recomienda a los propietarios de equipos de tecnología de la información (TI) que reciclen responsablemente sus equipos cuando éstos ya no les sean útiles. IBM dispone de una serie de programas y servicios de devolución de productos en varios países, a fin de ayudar a los propietarios de equipos a reciclar sus productos de TI. Se puede encontrar información sobre las ofertas de reciclado de productos de IBM en el sitio web de IBM http://www.ibm.com/ibm/environment/products/index.shtml.

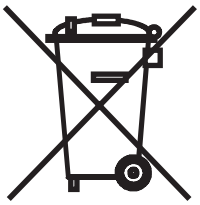

Notice: This mark applies only to countries within the European Union (EU).

Batteries or packaging for batteries are labeled in accordance with European Directive 2006/66/EC concerning batteries and accumulators and waste batteries and accumulators. The Directive determines the framework for the return and recycling of used batteries and accumulators as applicable throughout the European Union. This label is applied to various batteries to indicate that the battery is not to be thrown away, but rather reclaimed upon end of life per the Directive.

In accordance with the European Directive 2006/66/EC, batteries and accumulators are labeled to indicate that they are to be collected separately and recycled at end of life. The label on the battery may also include a chemical symbol for the metal concerned in the battery (Pb for lead, Hg for mercury and Cd for cadmium). Users of batteries and accumulators must not dispose of batteries and accumulators as unsorted municipal waste, but use the collection framework available to customers for the return, recycling and treatment of batteries and accumulators. Customer participation is important to minimize any potential effects of batteries and accumulators on the environment and human health due to the potential presence of hazardous substances.

The retail price of batteries, accumulators and power cells includes the cost of the environmental management of their waste. For proper collection and treatment, contact your local IBM representative.

注意: このマークは EU 諸国およびノルウェーにおいてのみ適用されます。

この機器には、EU 諸国に対する廃電気電子機器指令 2002/96/EC(WEEE) のラベルが貼られています。この指令は、EU 諸国に適用する使用済み機器の回収とリサイクルの骨子を定めています。このラベルは、使用済みになった時に指令に従って適正な処理をする必要があることを知らせるために種々の製品に貼られています。

Remarque : Cette marque s'applique uniquement aux pays de l'Union Européenne et à la Norvège.

L'etiquette du système respecte la Directive européenne 2002/96/EC en matière de Déchets des Equipements Electriques et Electroniques (DEEE), qui détermine les dispositions de retour et de recyclage applicables aux systèmes utilisés à travers l'Union européenne. Conformément à la directive, ladite étiquette précise que le produit sur lequel elle est apposée ne doit pas être jeté mais être récupéré en fin de vie.

In accordance with the European WEEE Directive, electrical and electronic equipment (EEE) is to be collected separately and to be reused, recycled, or recovered at end of life. Users of EEE with the WEEE marking per Annex IV of the WEEE Directive, as shown above, must not dispose of end of life EEE as unsorted municipal waste, but use the collection framework available to customers for the return, recycling, and recovery of WEEE. Customer participation is important to minimize any potential effects of EEE on the environment and human health due to the potential presence of hazardous substances in EEE. For proper collection and treatment, contact your local IBM representative.

Battery return program

This product may contain a sealed lead acid, nickel cadmium, nickel metal hydride, lithium, or lithium ion battery. Consult your user manual or service manual for specific battery information. The battery must be recycled or disposed of properly. Recycling facilities may not be available in your area. For information on disposal of batteries outside the United States, go to http://www.ibm.com/ibm/environment/products/index.shtml or contact your local waste disposal facility.

In the United States, IBM has established a return process for reuse, recycling, or proper disposal of used IBM sealed lead acid, nickel cadmium, nickel metal hydride, and battery packs from IBM equipment. For information on proper disposal of these batteries, contact IBM at 1-800-426-4333. Have the IBM part number listed on the battery available prior to your call.

For Taiwan: Please recycle batteries.

For the European Union:

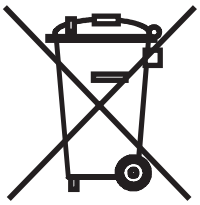

Notice: This mark applies only to countries within the European Union (EU).

Batteries or packaging for batteries are labeled in accordance with European Directive 2006/66/EC concerning batteries and accumulators and waste batteries and accumulators. The Directive determines the framework for the return and recycling of used batteries and accumulators as applicable throughout the European Union. This label is applied to various batteries to indicate that the battery is not to be thrown away, but rather reclaimed upon end of life per this Directive.

Les batteries ou emballages pour batteries sont étiquetés conformément aux directives européennes 2006/66/EC, norme relative aux batteries et accumulateurs en usage et aux batteries et accumulateurs usés. Les directives déterminent la marche à suivre en vigueur dans l'Union Européenne pour le retour et le recyclage des batteries et accumulateurs usés. Cette étiquette est appliquée sur diverses batteries pour indiquer que la batterie ne doit pas être mise au rebut mais plutôt récupérée en fin de cycle de vie selon cette norme.

バッテリーあるいはバッテリー用のパッケージには、EU 諸国に対する廃電気電子機器指令 2006/66/EC のラベルが貼られています。この指令は、バッテリーと蓄電池、および廃棄バッテリーと蓄電池に関するものです。この指令は、使用済みバッテリーと蓄電池の回収とリサイクルの骨子を定めているもので、EU 諸国にわたって適用されます。このラベルは、使用済みになったときに指令に従って適正な処理をする必要があることを知らせるために種々のバッテリーに貼られています。

In accordance with the European Directive 2006/66/EC, batteries and accumulators are labeled to indicate that they are to be collected separately and recycled at end of life. The label on the battery may also include a chemical symbol for the metal concerned in the battery (Pb for lead, Hg for mercury, and Cd for cadmium). Users of batteries and accumulators must not dispose of batteries and accumulators as unsorted municipal waste, but use the collection framework available to customers for the return, recycling, and treatment of batteries and accumulators. Customer participation is important to minimize any potential effects of batteries and accumulators on the environment and human health due to the potential presence of hazardous substances. For proper collection and treatment, contact your local IBM representative.

This notice is provided in accordance with Royal Decree 106/2008 of Spain: The retail price of batteries, accumulators, and power cells includes the cost of the environmental management of their waste.

For California:

Perchlorate material – special handling may apply. See http://www.dtsc.ca.gov/hazardouswaste/perchlorate/.

The foregoing notice is provided in accordance with California Code of Regulations Title 22, Division 4.5 Chapter 33. Best Management Practices for Perchlorate Materials. This product/part may include a lithium manganese dioxide battery which contains a perchlorate substance.

Electronic emission notices

Federal Communications Commission (FCC) statement

Note: This equipment has been tested and found to comply with the limits for a Class A digital device, pursuant to Part 15 of the FCC Rules. These limits are designed to provide reasonable protection against harmful interference when the equipment is operated in a commercial environment. This equipment generates, uses, and can radiate radio frequency energy and, if not installed and used in accordance with the instruction manual, may cause harmful interference to radio communications. Operation of this equipment in a residential area is likely to cause harmful interference, in which case the user will be required to correct the interference at his own expense.

Properly shielded and grounded cables and connectors must be used in order to meet FCC emission limits. IBM is not responsible for any radio or television interference caused by using other than recommended cables and connectors or by unauthorized changes or modifications to this equipment. Unauthorized changes or modifications could void the user's authority to operate the equipment.

This device complies with Part 15 of the FCC Rules. Operation is subject to the following two conditions: (1) this device may not cause harmful interference, and (2) this device must accept any interference received, including interference that may cause undesired operation.

Industry Canada Class A emission compliance statement

This Class A digital apparatus complies with Canadian ICES-003.

Avis de conformité à la réglementation d'Industrie Canada

Cet appareil numérique de la classe A est conforme à la norme NMB-003 du Canada.

Australia and New Zealand Class A statement

Attention: This is a Class A product. In a domestic environment this product may cause radio interference in which case the user may be required to take adequate measures.

United Kingdom telecommunications safety requirement

Notice to Customers

This apparatus is approved under approval number NS/G/1234/J/100003 for indirect connection to public telecommunication systems in the United Kingdom.

Deutschsprachiger EU Hinweis: Hinweis für Geräte der Klasse A EU-Richtlinie zur Elektromagnetischen Verträglichkeit

Dieses Produkt entspricht den Schutzanforderungen der EU-Richtlinie 2004/108/EG zur Angleichung der Rechtsvorschriften über die elektromagnetische Verträglichkeit in den EU-Mitgliedsstaaten und hält die Grenzwerte der EN 55022 Klasse A ein.

Um dieses sicherzustellen, sind die Geräte wie in den Handbüchern beschrieben zu installieren und zu betreiben. Des Weiteren dürfen auch nur von der IBM empfohlene Kabel angeschlossen werden. IBM übernimmt keine Verantwortung für die Einhaltung der Schutzanforderungen, wenn das Produkt ohne Zustimmung der IBM verändert bzw. wenn Erweiterungskomponenten von Fremdherstellern ohne Empfehlung der IBM gesteckt/eingebaut werden.

EN 55022 Klasse A Geräte müssen mit folgendem Warnhinweis versehen werden:

"Warnung: Dieses ist eine Einrichtung der Klasse A. Diese Einrichtung kann im Wohnbereich Funk-Störungen verursachen; in diesem Fall kann vom Betreiber verlangt werden, angemessene Maßnahmen zu ergreifen und dafür aufzukommen."

Deutschland: Einhaltung des Gesetzes über die elektromagnetische Verträglichkeit von Geräten

Dieses Produkt entspricht dem "Gesetz über die elektromagnetische Verträglichkeit von Geräten (EMVG)". Dies ist die Umsetzung der EU-Richtlinie 2004/108/EG in der Bundesrepublik Deutschland.

Zulassungsbescheinigung laut dem Deutschen Gesetz über die elektromagnetische Verträglichkeit von Geräten (EMVG) (bzw. der EMC EG Richtlinie 2004/108/EG) für Geräte der Klasse A

Dieses Gerät ist berechtigt, in Übereinstimmung mit dem Deutschen EMVG das EG-Konformitätszeichen - CE - zu führen.

Verantwortlich für die Konformitätserklärung des EMVG ist die IBM Deutschland GmbH, 70548 Stuttgart.

Generelle Informationen:

Das Gerät erfüllt die Schutzanforderungen nach EN 55024 und EN 55022 Klasse A.

European Union EMC Directive conformance statement

This product is in conformity with the protection requirements of EU Council Directive 2004/108/EC on the approximation of the laws of the Member States relating to electromagnetic compatibility. IBM cannot accept responsibility for any failure to satisfy the protection requirements resulting from a nonrecommended modification of the product, including the fitting of non-IBM option cards.

This product has been tested and found to comply with the limits for Class A Information Technology Equipment according to CISPR 22/European Standard EN 55022. The limits for Class A equipment were derived for commercial and industrial environments to provide reasonable protection against interference with licensed communication equipment.

Attention: This is a Class A product. In a domestic environment this product may cause radio interference in which case the user may be required to take adequate measures.

European Community contact:
IBM Technical Regulations
Pascalstr. 100, Stuttgart, Germany 70569
Telephone: 0049 (0)711 785 1176
Fax: 0049 (0)711 785 1283
E-mail: tjahn@de.ibm.com

Taiwanese Class A warning statement

警告使用者:
這是甲類的資訊產品，在
居住的環境中使用時，可
能會造成射頻干擾，在這
種情況下，使用者會被要
求採取某些適當的對策。

台灣IBM 產品服務聯絡方式：
台灣國際商業機器股份有限公司
台北市松仁路7號3樓
電話：0800-016-888

Japanese Voluntary Control Council for Interference (VCCI) statement

この装置は、情報処理装置等電波障害自主規制協議会（ＶＣＣＩ）の基準に基づくクラスＡ情報技術装置です。この装置を家庭環境で使用すると電波妨害を引き起こすことがあります。この場合には使用者が適切な対策を講ずるよう要求されることがあります。

Korean Class A warning statement

이기기는 업무용으로 전자파 적합등록을 받은 기기
이오니, 판매자 또는 사용자는 이점을 주의하시기
바라며, 만약 잘못 구입하셨을 때에는 구입한 곳에
서 비업무용으로 교환하시기 바랍니다.

Index

Part Number: 44R5161

(1P) P/N: 44R5161